The Neglected Consumer: The Case of the Smart Meter Rollout in the Netherlands

Robin Hoenkamp, George B. Huitema** and Adrienne J.C. de Moor-van Vugt****

Smart metering is an important tool in support of the transition to decentralized renewable energy production. However, the introduction of such a new tool requires careful preparation in order to convince people to accept it in their homes. The Dutch experience shows, that smart metering is up for failure when the technical and commercial aspects are considered to be more important than the interests of the end users. This paper examines the procedural and material prerequisites to engineer standards for smart metering in such a way that the interests of all parties involved are reflected in the outcome.

I. The Energy Revolution

1. Background

The electricity market is undergoing drastic changes. While the logistics of our electricity supply system have been organized in the same way for almost a century, we are currently at a stage, in which ICT technology added to the electricity grids makes the logistics smarter; therefore we speak of Smart Grids. With the help of ICT, detailed information on the quantities of electricity supply and demand will be gathered so that the demand of electricity can be matched to the supply. Such detailed information is especially advantageous in the transition to more renewable energy production, since that type of energy comes from intermittent sources (e.g. sun and wind) making the balancing of the grid crucial. This change means that two, so far separate worlds, the energy market and the world of information technology, are gradually intertwining.

The introduction of a Smart Meter is the first stage towards smarter electricity grids. Such a meter is an electricity meter that by means of ICT communicates electricity usage to different channels such as in-house appliances, or external service providers. It provides detailed information on electricity usage for peak consumption, averages, etc. The main difference with a traditional meter is that instead of only showing the current usage on the meter itself, it can also communicate the usage details directly to other parties, such as distribution system operators (DSO's) or utilities.

Smart Meters have already been introduced in several regions. In Europe, Italy and Sweden are the first to complete a near full rollout of the Smart Meter, while several European countries prepare the take off. Worldwide Canada (Ontario) and Australia (Victoria) took the lead and other countries such as Japan, South Korea, and parts of the US have initiated rollouts as well.

Currently, market parties are highly involved in the transition to Smart Grids, while the majority of the public is relatively unaware of these developments. However, in the light of the worldwide CO2 reduction goals, the success of the transition is not only dependent on market parties such as DSO's, smart appliances industry, electricity suppliers etc. The participation of electricity consumers is crucial

* Robin Hoenkamp is PhD student at the University of Amsterdam in the Amsterdam Center for Energy Research, the Netherlands. Her thesis is about safeguarding public interests in the standardization processes of Smart Grids; R.A.Hoenkamp@uva.nl.

** George B. Huitema is Senior Scientist in the Smart Energy Systems Group of TNO and Professor of Telematics at the University of Groningen, both in the Netherlands; G.B.Huitema@rug.nl.

*** Adrienne J.C. de Moor-Vugt is Professor of Constitutional and administrative law at the Law Faculty of the University of Amsterdam. She set up the Research Group Market Regulation in the Law Faculty and is co-director of the Amsterdam Center for Energy Research; a.de.moor@uva.nl.

to make the shift to renewable energy succeed.[1] They possess large amounts of space on their roofs, suitable for solar panels, potential sources for renewable energy. Electricity consumers need to take part in the transition to Smart Grids to utilize that capacity. Eventually, they will need to use the Smart Grid to save energy, and produce and trade their electricity, gained from sustainable sources. It is therefore vital that the consumers are stimulated to use the grid for their benefit and for the common good. Extra attention has to be paid to consumer interests that might not even exist in the present time like Demand Response Programs.[2] Consequently, the Smart Grid should be designed with the perspective of the consumer in mind, instead of primarily market party interests, as is currently the case.

In the slipstream of technological developments the necessity for setting ICT-standards has become urgent. Ensuring interoperability of Smart Grids and all relevant aspects from the start is crucial for all involved stakeholders. The development of standards for Smart Meters and Smart Grids has high priority on the European agenda.[3] The way in which these standards are developed, however, can have weighty consequences for citizens, who will eventually be the end-user of the newly developed techniques. The new standards may influence the reliability of electricity supply. Also, standards may affect personal privacy when e.g. the underlying technologies make it possible to send detailed data about day-to-day use to the supplier. It is, therefore, important that the interests of the consumer are taken into account during the process of standardizing. If not, chances are that market parties develop technologies that hurt consumer's interests or even infringe on their rights.

This is the main conclusion from research on the rollout of the Smart Meter in the Netherlands. In this case, the privacy protection of the consumer was overlooked during the standardization process, which in the end had serious repercussions for the public interests. Public resistance against smart metering is often related to fear of privacy infringements, health risks and increase in costs. It is therefore beneficial to look at the Dutch case, in order to understand how certain problems occur, and how they can be dealt with in future standardization processes for smart meters and smart grids.

This paper gives an overview of the situation on standardization of smart meters in the EU and touches upon some relevant worldwide developments with their rollouts. It analyzes how the Smart Meter architecture was determined in the Netherlands, what the underlying policy was, and what problems occurred over time. From this Dutch case lessons can be learned how to improve European and International standardization of Smart Grid processes and technologies in the transition to renewable energy.

2. Standardization

Standardization is becoming more and more an important tool to support policy objectives.[4] Here, we will briefly go into what standardization means and touch upon the recent academic debate on standardization.

The EU Information Directive concerning standardization defines a standard as: 'A technical specification approved by a recognized body for repeated or continuous use, with which compliance is not compulsory.[5] Standards can be adopted by international, European or national bodies. Generally, standards can be divided into two groups: regulatory standards or coordinative standards.[6]

1 Annelies Huygen, "De consument en de (on)vrije elektriciteitsmarkt", in Simone Pront-van Bommel (ed.), *De consument en de andere kant van de elektriciteitsmarkt* (Amsterdam: UvA Centrum voor Energievraagstukken, 2011), at pp. 102–107 (Dutch).

2 Position Paper on Smart Grids, An ERGEG Public Consultation Paper, December 2009, ref.: E09-EQS-30-04, at p. 28.

3 Commission Communication to the European Parliament, the Council, and the European Economic and Social Committee, A Digital Agenda for Europe, COM(2010)245 final/2.

4 For example in executing the Commission Communication to the European Parliament, the Council, and the European Economic and Social Committee, A strategic vision for European standards: Moving forward to enhance and accelerate the sustainable growth of the European economy by 2020, COM(2011)311.

5 Council Directive 98/34/EC laying down a procedure for the provision of information in the field of technical standards and regulations, OJ 1998 L 204, Art. 1, hereafter Information Directive.

6 This is the categorization Werle and Iversen (Raymund Werle and Eric Iversen, "Promoting Legitimacy in Technical Standardization", 22006 *Science, Technology & Innovation Studies* (2006)) use. Other authors use different terms such as quality and compatibility standards (Knut Blind, *The Economics of Standards: Theory, Evidence, Policy* (Glos: Edward Elgar Publishing Ltd, 2004)) while yet others (Harm Schepel, *The Constitution of Private Governance: Product Standards in the Regulation of Integrating Markets* (Oxford etc.: Hart, 2005)) argue that this distinction is too straightforward as many coordinative standards are also regulated.

Regulatory standards are mainly developed in support of policy goals, such as safety or environmental protection. In the EU, these standards can be found in the New Approach to standardization.[7] The New Approach was introduced in 1985 in support of the Single Market. The goal was to set up a European standardization system, in order to remove technical barriers to trade. The Directives frame the "essential requirements" for products, on the basis of which standards have been developed. This approach is fine-tuned with the New Legislative Framework for standards.[8]

Coordinative standards are set for the sole purpose of interoperability between technologies. Remarkably, when speaking about standards legal scholars will mostly automatically think of regulatory standards, while scholars in exact sciences will be likely to assume it concerns coordinative standards.

Often standards come about, when dominant market parties gather to discuss how to develop a new standard, compatible with their own technologies. Market parties tend to make sure that their own interests are represented and thereby exclude other companies from the market.[9] Hence, standards can never be regarded to be purely technical and neutral. They often are an expression of commercial or political interests of the companies concerned.[10] Because the main driving forces are business interests, it is unlikely that public interests such as safety, privacy protection or environmental protection (apart from the possible "essential requirements") will be promoted.[11]

Standards can have great impact on peoples' behavior. An extreme example is the increase of the standard for portions in the US, which raised the daily calorie intake of US citizens drastically.[12] Not only practical standards such as these influence peoples' behavior and attitude, technical and communication standards can affect personal lives as well. Technology can influence behavior the same way as law or can even be more coercive when the user has no choice but to follow its rules.[13] The construction of a standard determines the way one needs to operate a technology, what the limits are, how much electricity it consumes etc. This will become clear from the Dutch Smart Meter case. Many scholars perceive standardization, especially on EU level, as an attempt to deregulate and privatize EU regulation.[14] Therefore, such a process needs legitimacy; even more so since, apart from the economic and technical concerns, political decisions are bound to be made in the standardization process.[15]

II. Smart Meter Standardization and Rollout

1. Introduction

In order to make smart grids work, new techniques must be interoperable. At present, technicians are working hard to set standards for hundreds of techniques, systems, devices and appliances. Ideally, in every standard setting process public and private interest groups would be involved. As we will see this is very hard to realize and feedback of individuals will only occur when confronted with the use and consequences of technologies.

The introduction of Smart Meters is the result of EU legislation. The Third Energy Package prescribes that member states should replace at least 80% traditional meters with Smart Meters by 2020.[16] At this moment, most EU countries are rolling out Smart Meters. The Directive set the

7 Council Resolution 85/C 136/01 on a new approach to technical harmonization and standards, hereafter New Approach, OJ C 136 of 4 June 1985.

8 Commission Decision on a common framework for the marketing of products, OJ 2008 L 218, hereafter NLF.

9 Andreiw S. Lim, *Power Battles is ICT Standard-Setting Process: Lessons from Mobile Payments* (Diss. Technische Universiteit Eindhoven) (Eindhoven: 2006), p. 51.

10 Werle and Iversen, "Promoting Legitimacy", *supra* note 6, p. 23.

11 Christian Joerges, Harm Schepel and Ellen Vos, *The Law's Problems with the Involvement of Non-governmental Actors in Europe's Legislative Processes: the Case of Standardisation under the "New Approach"* (San Domenico: European University Institute, 1999), at p. 9.

12 Samara Nielsen and Barry Popkin, "Patterns and Trends in Food Portion Sizes, 1977–1998", 4 *JAMA-J Am Med Assoc* (2003), pp. 450–453.

13 Simone van der Hof and Kees Stuurman, "Code as Law", in Bert-Jaap Koops et al. (eds), *Starting Points for ICT Regulation: Deconstructing Prevalent Policy One-Liners* (The Hague: Asser Press, 2005), p. 207. This is just a fragment of the discussion concerning "LexInformatica" or "Code is Law".

14 Schepel, *The Constitution of Private Governance, supra* note 6, at p. 67.

15 Joerges, Schepel and Vos, *The Law's Problems: the Case of Standardisation*, *supra* note 11, at p. 53.

16 Directive 2009/72/EC concerning common rules for the internal market in electricity, OJ 2009 L 211.

deadline for assessments on the introduction of intelligent metering on September 3 2012. This means that member states should at least have completed trials before that time. The European Parliament requested a 50% rollout of Smart Meters in the EU by 2015.[17]

Other countries are rolling out significant numbers of Smart Meters as well. In 2010 the US had a nearly 9 % penetration of Smart Meters for residential customers, the state of Arizona leading with 29.1 %.[18] The total reported investments have reached $2,3 billion.[19] Policy of Smart Meter deployment varies by state, but the main instruments on a Federal level are the Energy Independence and Security Act of 2007[20] and the American Recovery and Reinvestment Act of 2009.[21] In Brazil DSO's CEMIG and AMPLA are rolling out Smart Meters in order to track electricity theft, in Korea the Ministry of Knowledge Economy initiated a rollout in favor of the transition to Smart Grids.[22]

2. Policy Background

The introduction of the Smart Meter on European level is in favor of the 20 %-20 %-20 % targets of the EU Climate and Energy Package. These targets stand for reduction of greenhouse gas emissions, increase of renewable energy, and more energy efficiency. The meter plays an especially important role in the energy efficiency aim as it can help households to reduce their energy use by becoming more aware of their usage.

The EU Energy Efficiency Directive 2006/32 EC[23] required member states to provide citizens with Smart Meters. Italy and Sweden were the first EU countries to initiate Smart Meter rollouts, even before this Directive, other member states followed later. In Italy a number of distribution system operators immediately started the rollout of meters, yet lacking any common standards. Therefore, in 2006 Italy introduced a minimum set of functions to which new meters should comply.[24]

In the meantime, in March 2009, the European Commission issued a standardization mandate to CEN (Comité Européen de Normalisation), CENELEC (Comité Européen de Normalisation Électrotechnique) and ETSI (European Telecommunications Standards Institute) to develop an 'open architecture' for Smart Meters. CEN, CENELEC and ETSI are European standardization bodies. The objective of this mandate is to enable interoperability between meters, and thereby improve customer awareness to allow timely adaption in their demands.[25]

Until these European Smart Meter standard development is advanced far enough, member states need to determine the functionalities for the meter. Different countries have different approaches. In the UK, for example, the Department of Energy and Climate Change together with the Office of Gas and Electricity Market developed a list 119 of technical requirements.[26]

In the preparatory stage of the Third Energy Package, issued in Directive 2009/72/EC, the Smart Meter was an important topic. The Committee of Regions brought forward issues regarding the price of the meter and the suitability of the meter.[27] The European Economic and Social Committee stressed the functionality of of bidirectional energy flow of the meter.[28] The Committee on Industry, Research and Energy proposed several amendments, con-

17 European Parliament resolution: Towards a new Energy Strategy for Europe 2011–2020, A7-0301/2010.

18 FERC, Assessment of Demand Response and Advanced Metering – Staff Report, February 2011, pp. 9–11.

19 Available on the Internet at <http://www.smartgrid.gov/recovery_act> (last accessed on 16 November 2011).

20 Energy Independence and Security Act of 2007, Public Law 110–140, 19 December 2007.

21 American Recovery and Reinvestment Act of 2009, Public Law 111–5, 17 February 2009.

22 Jessica Strömbäck and Christophe Dromacque, *Evaluation of Residential Smart Meter Policies,* VaasaETT Global Energy Think Tank, July 2010.

23 Directive 2006/32 EC on energy end-use efficiency and energy services and repealing Council Directive 93/76/EEC, OJ 2006 L 114/64.

24 J. Vasconselos, *Survey of Regulatory and Technological Developments Concerning Smart Metering in the European Union Electricity Market,* RSCAS PP 2008/01, Florence School of Regulation, p. 48.

25 Commission Standardisation Mandate to CEN/CENELEC and ETSI in the field of measuring instruments for the development of an open architecture for utility meters involving communication protocols enabling interoperability M/441, March 2009, p. 1.

26 Department of Energy and Climate Change and the Office of Gas and Electricity Markets: Functional requirements catalogue, Appendix to support Document 3 of 5 Design Requirements.

27 CoR 22/92, Opinion of the Committee of Regions No. 22 of 2008.

28 EESC(08)314-318, Opinion of the European Economic and Social Committee No. 314-318 of 2008.

cerning data handling and the access for consumers. However, these were not accepted.[29] In a later reading of the proposals, they put forward the proposition for an economic assessment, preceding the meter rollout. With a positive outcome the aim would be a 80 % rollout by 2020.[30] This proposal was adopted in the final Directive.

The first article of the Directive makes it clear that the underlying goal of the Smart Meter is energy efficiency. The preamble and Annex I mention that active consumer participation in balancing the grid through input and consumption is recommendable. This directive also aims at the deployment of Smart Grids, which should contribute to the use of renewable energy sources and distributed generation. Hence, Smart Meters are supposed to support the possibility for consumers to be producers of electricity.

Somehow, the meter must be equipped with all the necessary functionalities in order to reach these goals, which has important consequences for the standards that are being developed both on EU and national level. As we will show, however, this is hard to bring about in the absence of a clearly defined framework for these standards.

3. A Closer Look at the Functions of the Meter in Relation to the Stakeholders

According to the Smart Meter Coordination Group (SM-CG), the standards should be based on the following functions:

1. Remote reading of metrological register(s) and provision to designated market organizations.
2. Two-way communication between the metering system and designated market organization(s).
3. To support advanced tariffing and payment systems.
4. To allow remote disablement and enablement of supply and flow/power limitation.
5. Communicating with (and where appropriate directly controlling) individual devices within the home/building.
6. To provide information via web portal/gateway to an in-home/building display or auxiliary equipment.[31]

The mandate refers to Article 13 sub 1 of Directive 2006/32/EC, which determines the necessary features for metering and informative billing of energy consumption. It requires that final customers are provided with competitively priced individual meters that accurately reflect the final customer's actual energy consumption and that provide information on actual time of use. Further, it demands compliance with the Measuring Instruments Directive 2004/22/EC and Directives 95/46/EC[32] and 2002/58/EC[33] concerning personal data protection.

In Table 1 below, the correlation between services necessary for active consumer participation and the functionalities described in the SM-CG is presented. It is clear that the possibility to measure consumption and production is not encompassed by the mandate. This possibility is, however, crucial for households to produce their energy, as a method to measure the amount they produce. Although active consumer participation is repeatedly considered to be crucial in EU policy, this table shows that policy aims do not of themselves reappear in the final standards. We will come back to this topic later.

In official EU standardization processes several public interest representatives are supposed to take part in the standardization process.[34] In this mandate the Commission asks the European Standardization Organizations (ESO's) to invite organizations of consumer's interests ANEC (European Association for the Co-ordination of Consumer Representation in Standardisation), Environmental protection ECOS (European Environmental Citizens' Organisation for Standardisation), workers ETUI-REHS (European Trade Union Institute for Research, Education and Health and Safety) and small and medium- sized enterprises NORMAPME

29 Parliament Legislative Resolution on the proposal for a directive of the European Parliament and of the Council concerning common rules for the internal market in electricity amending Directive 2003/54/EC, A6-0191/2008.

30 Parliament Legislative Resolution on the proposal for a directive of the European Parliament and of the Council concerning common rules for the internal market in electricity amending Directive 2003/54/EC, A6-0216/2009.

31 Smart Meter Coordination Group, Final Report (version 0.7-2009-12-10), at p. 9.

32 Directive 95/46/EC on the protection of individuals with regards to the processing of personal data and on the free movement of such data, OJ 1995 L 281.

33 Directive 2002/58/EC concerning the processing of personal data and the protection of privacy in the electronic communications sector, OJ 2002 L 201.

34 Commission Communication to the European Parliament, and the Council on the role of European standardization in the framework of European policies and legislation, COM(2004)674.

ELECTRICITY	Additional functionalities according to Mandate M/441					
	Remote reading, meter reading of injected and consumed energy, F1	Two-way communication, F2	Interval metering/ registers, F3	Remote management, F4	Interface with the home/ home automation, F5	Information through webportal/ gateway, F6
E 2. Information on actual consumption, on a monthly basis, free of charge	■		■			■
E 3. Access to information on consumption data on customer demand			■			■
E 4. Easier to switch supplier, move or change contract	■	■	■			
E 5. Bills based on actual consumption	■		■			
E 6. Offers reflecting actual consumption patterns	■	■	■			
E 7. Remote power capacity reduction/increase		■		■		
E 8. Remote activation and de-activation of supply		■		■		
E 9. All customers should be equipped with a metering device capable of measuring consumption and injection						
E 10. Alert in case of non-notified interruption		■				■
E 11. Alert in case of exceptional energy consumption	■	■	■		■	■
E 12. Interface with the home					■	■
E 13. Software to be upgraded remotely		■				

Table 1: Correlation of Mandate M/441 additional functionalities and ERGEG Electricity recommendations

Source: Final Guidelines of Good Practice on Regulatory Aspects of Smart Metering for Electricity and Gas, ERGEG: 8 February 2011.

(European Office of Crafts, Trades and Small and Medium-sized Enterprises for Standardization) to join. However, these organizations are there to shed light on the relevant interests, yet do not have voting rights. Above all, they do not have the financial capacity, or expertise to fully participate in all of the standardization processes that are occurring regarding Smart Meters at the moment.[35] And even though there exists a relatively high level of transparency as the Draft Technical Reports are publically available, these are not available for free and therefore not all interested parties will be able to review them.

Generally speaking five different roles or parties can be distinguished that affected the Smart Meter case: Metering industry, DSO's, suppliers, the European Union, and the users/public. All these players have different, albeit sometimes overlapping, interests. First of all, metering industry obviously has the interest of rolling out as many meters as possible. DSO's have the interest of executing the statutory task of constructing and managing the grid, whereby the Smart Meter is especially helpful in facilitating the administrative process.[36] Suppliers

35 More than fifty according to the M/441-Work Programme (SMCG_Sec0025_DC_V0.0.2).

36 As stated to be the most important purpose for network operators according to a letter from Netbeheer Nederland to Senate (*Kamerstukken I* 31320/31374 2008/09 No. 26-1324).

benefit from the Smart Meter through the ability to bill customers through the remote readings from the meter. The European Union's interest can be assumed to be equivalent to the public interest, which also varied during the process, as is demonstrated by the changing purposes of the meter through the years. Finally, the main consumer interest is saving on energy consumption. It should be noticed that contrary to users in most cases of standardization, as a general rule the users of Smart Meters will not own the meter in most EU countries.[37] The DSO will maintain ownership of the meter after it is installed, and users will have no choice in types of meters.

The first three parties – DSO's, suppliers, and metering industry – are highly involved in the standardization process. However, after giving the standardization mandate, the Commission will not be involved in the process of standardization, and therefore will not be able to directly influence it. The public interests organizations might observe the process, yet they are incapable of contributing to it. They lack sufficient means, financial means and knowledge, to actually influence the process, and it is to be expected that their interests will hardly be taken into account. Above all, these organizations do not have enough scope to participate in all of the hundreds arising standardization committees. Therefore, the interests of the market parties involved will be the only ones, which will surely be expressed in the final standard as these parties are the driving forces behind the standard. Without incentives to consider other interest, it will be unlikely that all relevant public interests will be provided for in the future standards.

The consumer plays an important role in the EU energy policy, through the right to universal services of electricity. In the standardization mandate customer awareness and adaption in their demand is key. More specific, the European parliament stressed that the Smart Meters should have the possibility for aggregation, so that end-users can combine their load in order to obtain lower rates. Also it is important that the meters are energy efficient in design.[38] These aspects are not accounted for in the framework of the SM-CG.

Even though the parties involved in the standardization at the moment might not necessarily want to disregard public interests, without a clear framework with precise limits for the standards in substance, it will be very unlikely that the responsible parties will automatically abide by rules and limits to the benefit of the final user. Only time will tell whether the standards will sufficiently safeguard environmental, consumer, and other public interests. However, the next paragraph shows the risks of not providing standardization committees with a relevant framework for the protection of these interests.

III. The Dutch Smart Meter Rollout

1. Introduction

In this chapter we will give an overview of the current state of affairs concerning the Smart Meter rollout in the Netherlands and what has happened since the topic of the Smart Meter was introduced in the Dutch parliament. This chapter is meant as an illustration of possible problems in standardization of Smart Meters. The Dutch case shows which issues are important to focus on in upcoming rollouts all over the world.

In 2012, the Netherlands plans a pilot rollout of the meter, which, in line with Directive 20009/72/EC, will be expanded if the pilot is successful. An Order in Council provides the framework for the new meter through minimum requirements. The new standard, which will be a revision of the Dutch Smart Meter Requirements (DSMR), will have to comply with this Order. Following the pilot the standard will be reviewed and adjusted if necessary.

As we will see in section 2 below, the rollout of the smart meter in the Netherlands had a rough start. While the Netherlands actually made a head start in 2004, the regulated pilot can only start 8 years later. This delay was mainly due to unanticipated resistance from the public. Several groups in society were worried that the Smart Meter rollout would result in severe privacy rights infringements as network operators and suppliers would be able to keep track of consumers' electricity use. Rules

37 Jorge Vasconselos, *Survey of Regulatory and Technological Developments Concerning Smart Metering in the European Union Electricity Market,* RSCAS PP 2008/01, Florence School of Regulation, at p. 22.

38 European Parliament Resolution of 15 December 2010 on the Revision of the Energy Efficient Action Plan A7-0331/2010.

facilitating possible infringements were not only laid down in the Bill regarding the rollout, but also in the proposed interoperability standard for the meter. Finally, the privacy concerns were resolved through revision of the first proposal, but it caused a great setback in the rollout. Furthermore, because of the political pandemonium from the start the Smart Meter has now got a bad public reputation. Consequently, a future rollout is likely to be susceptible to cause more resistance.

2. Policy Background

In short the meter rollout had three phases. In the first phase, the government introduced the Smart Meter as a policy goal, which eventually led to the development of the NTA 8130. In the second phase, the rollout was laid down in a Bill, which was met severe criticism from several political parties in parliament. In the third and final phase, the Bill was modified and the pilot rollout implemented in the Electricity Act.

The first time Dutch legislative history mentions the Smart Meter is in 2004 from the perspective of improving the demand response at the level of small consumers.[39] This is prior to the European obligation of the rollout following Electricity Directive 2006/32 EC. The next instance the Smart Meter is brought up in the legislative history is more than a year later. By then standardization is already pointed out as a crucial step.[40]

In the same year KEMA (Keuring van Elektrotechnische Materialen, Inspection of Electro technical Materials), a Dutch energy consulting- and certification organization, issues a report containing a cost-benefit analysis of the Smart Meter. In this report the basic functionalities are presented: determining and saving real-time usage, remote and local reading of usage, functionality to remote limitation or shut down of energy usage.[41]

In the meantime the Dutch Standardization Institute (Nederlands Normalisatie Instituut, NEN), performed a "strategic exploration" on smart meters commissioned by SenterNovem (part of the Ministry of Economic Affairs), similar to a Workshop Agreement of CEN/CENELEC at EU level. In this exploration the NEN brought 70 stakeholders together to discuss possibilities of demand response and the Smart Meter. The survey concluded that the majority of the stakeholders were not inclined to focus on consumers to stimulate demand-response.[42] Later the Ministry of Economic Affairs instructed the NEN to set a NTA (Nederlands Technische Afspraak, Dutch Technical Agreement) standard and "draw up and describe a standardized minimum set of basic functions for a remotely readable meter".[43]

The standing committee of Economic Affairs pointed out that from the point of view of the consumer the meter should meet with minimum requirements for communication and information, such as a display of average usage.[44] The Minister of Economic Affairs, Wijn, responded that the meter would be beneficial to consumers, because it would offer more frequent and precise information on their energy use. That way distributors would be able to offer better advice on saving opportunities and information on estimated yearly usage.[45] However, the main purpose of the Smart Meter was said to be a measure to alleviate administrative burdens for the energy sector.[46]

Up until this point the discussion around the Smart Meter was not linked to any bill yet.[47] However, in March 2008 a proposal for changes in the Electricity Act 1998 encompassed the compulsory rollout of the Smart Meter.[48] This Bill stated that the functions of the meter would be determined by an Order in Council.

Around the same time, the privacy and security of the meter popped up in public discussion and parliament raised these concerns in its discussions about the Bill.[49] The security as well as privacy protection became so important, because added

39 *Kamerstukken II* 2003/04 29023 No. 4, § 5.2.

40 *Kamerstukken II* 2004/05 28982 No. 44, p. 7.

41 Domme meters worden slim? Kosten-batenanalyse slimme meetinfrastructuur, KEMA: Arnhem 30 August 2005, at p. 55 (Dutch).

42 Ortwin Costenoble, Ton van Bergeijk, and M. van der Wouden, "Strategische Verkenning 'Meetinfrastructuur en slimme meters' voor energieverbruik", NEN May 2005, at p. 11. However, they do not mention on what this conclusion is based.

43 NTA 8130:2007, at p. 2.

44 *Kamerstukken II* 2006/07 28982 No. 54, p. 2.

45 *Kamerstukken II* 2006/07 28982 No. 57, p. 1.

46 *Kamerstukken II* 28982 No. 61, p. 22.

47 The rollout is also part of Bills 31373, 31320 and later became 32373 and 32374.

48 *Kamerstukken II* 31374, proposal for "Alteration of the Electricity Act 1998 and the Gas Act to improve the operation of the electricity and gas market".

49 *Aanhangsel Handelingen II* 2007/08 No. 373, p. 1.

software to the electricity meter makes the meter vulnerable for hacking and cybercrime. Moreover, the Committee for the Protection of Personal Data (College Bescherming Persoonsgegevens, CBP) advised against submission of the Bill in its report concerning the conformity of the Bill with the Personal Data Protection Act (Wet Bescherming Persoonsgegevens, WBP). On top of that, the Consumers' Association published a report from legal experts, in which the claim was made that a mandatory roll out of the meter would constitute an infringement of the right to privacy as protected in the WBP and the European Convention on Human Rights (Article 8).[50] This violation was due to the function of the automatic remote reading of energy use by the distributor every fifteen minutes, standardized in the NTA. In the same month the Dutch Applied Research institute TNO (Toegepast Natuurwetenschappelijk Onderzoek) published an article in which it criticizes the NEN Smart Meter standard NTA 8130.[51] One of their points of criticism entailed that the display was not changed in comparison to the old meter, and thus would not influence consumer's energy awareness; hence, the meter did not provide a solution for sustainability or energy-efficiency. In the end, so many problems and questions had been raised, that the NTA8130 would not be feasible as the national standard. The preparations for the roll out, however, did not allow for much delay, and the network operators decided to assemble and discuss their own standards, resulting in the DSMR.

Finally, in April 2009 the Senate requested a revision of the Bill, that boiled down to the right of the consumer to refuse having a Smart Meter installed.[52] Shortly after the House of Representatives accepted this proposed revision, Vrijbit, an organization that fights for privacy rights, put another objection concerning privacy protection forward. However, since the revision does not make the rollout mandatory (for now), the issue of privacy infringements is tackled. The Bill concerning the rollout was adopted in February 2011, followed by an Order in Council[53] which came into force in January 2012. This Order determines the functions of the Smart Meter on which the final standard should be based. The DSMR will be made consistent with this Order. The actual rollout is planned for the beginning of 2012.

3. A Closer Look at the Functions of the Meter in Relation to the Stakeholders

In the Dutch debate on the Smart Meter rollout, the functions of the meter have, directly and indirectly, played an important role. The standardization process in the Netherlands started in fact with the NEN Workshop in the first phase where the functions for a smart meter were decided upon and worked out in more detail in the final standard. The NTA8130 standardization committee finally decided on the following functions for the Smart Meter:[54]

1. Contribute to the improvement of the administrative processes by periodically and on demand generating real and remotely readable meter readings (every 15 minutes).
2. Provide suppliers with the possibility to create awareness of the energy usage, and stimulate energy savings.
3. Activate or de-activate connections for gas and electricity remotely in a safe way.
4. Remotely adjust transmission values collectively or individually.
5. Provide the possibility for the supplier to work with differentiated tariffs.
6. Provide a possibility for a prepaid system.
7. Can be used to monitor the distribution network.

In short the standard provides four communication ports for the meter (See Figure 1 below). The first port (P1) is the consumer port. On this port consumer interfaces can be added, such as a display. It can only communicate information directly from the meter. It cannot transmit information to the meter, display interval values or communicate externally. The second port (P2) communicates to the so-called Central Access Server (CAS). This port communicates from and to the meter, and shares

50 Colette Cuijpers and Bert-Jaap Koops, *Het wetsvoorstel "slimme meters": een privacytoets op basis van art. 8 EVRM,* TILT- Centrum voor Recht, Technologie en Samenleving UvT, October 2008 (Dutch).

51 Johan Boekema and George Huitema, "Belemmering innovatie energiemarkt door implementatie voorgestelde Slimme Meter", available on the Internet at <http://www.eerstekamer.nl/wetsvoorstel/31374_verbetering_werking> (last accessed on 12 December 2011) (Dutch).

52 *Kamerstukken I* 2008/2009 31320, 31374 No. 28.

53 Besluit van 27 October 2011, houdende regels over op afstand uitleesbare meetinrichtingen, hereafter Order.

54 NTA 8130:2007, p. 2.

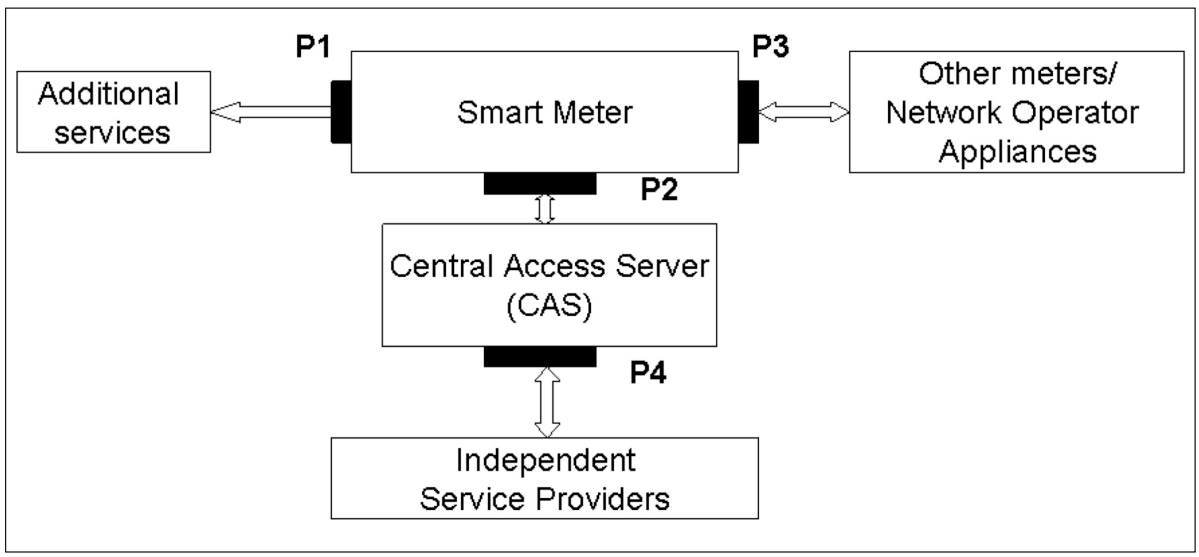

Figure 1: Communication ports of the Smart Meter

Source: Authors.

interval values. The third port (P3) can communicate with other meters and network operators' appliances. There can be multiple types of information communicated through this port, such as interval values and transmission values. P2 then communicates this information every fifteen minutes through the fourth port (P4) to network operators, suppliers or third parties.

It is obvious that all the functions determined in this standard are highly beneficial for DSOs by improving the administrative process and monitoring the network. Furthermore, the standard is advantageous to the suppliers by creating a possibility for them to provide energy efficiency services and remote disconnection. However, no direct interface for the consumer is mentioned, which is exactly the function that is needed to provide him with the information to save energy, without that information leaving the house and with that providing privacy protection.

The successive Ministers of Economic Affairs changed the goal that the Smart Meter should serve constantly throughout the process. One emphasized the purpose of providing suppliers with the possibility to offer added value services, and for the network operators to optimize the functioning of the grid,[55] while others stress the importance of improving demand-response[56]. However, the interests of the households, and especially their interests in producing sustainable energy and energy efficiency, tended to come in last in the discussion. Even after the majority of parliament stressed that the meter should include functions for consumers to help them save energy and keep track of their produced energy, the then Minister of Economic Affairs disregarded the concerns by stating that such functions should be left to the market to be offered, and should not be part of the standard meter. Furthermore, designing the meter in such a way that personal privacy would be protected did only come up in a very late stage.

The NTA standardization was unsuccessful and it would never be used for the rollout. The concerning standardization committee was mainly composed of metering companies, suppliers and network operators. TNO was part of the committee at first, but decided against participation due to the lack of ICT knowledge in the committee, which it feared would lead to a deficient standard.[57] Even thought the report of the first NEN meeting mentioned that all different types of stakeholders took part in the discussion, including consumer organizations[58], the list of participants does not mention

55 *Kamerstukken II* 2005/06 28982, No. 51, p. 4.

56 *Kamerstukken II* 2004/05 28982, No. 4.4, p. 7.

57 Interview with a participant of the NTA 8130 committee for TNO on 13 January 2011, for whom the main objection to the standard was the fact that the standard was not future-proof and did not provide a level playing field.

58 Costenoble, van Bergeijk, and van der Wouden, Strategische Verkenning, *supra* note 42, at p. 7.

any consumer organizations.[59] Organizations representing other interests such as environmental protection weren't even mentioned.

The Order in Council concerning the functions of the meter makes up for the in retrospect disorganized start – albeit 7 years late – by elaborating on the households' interests. For example, the policy aim of the Smart Meter is said to be to comply with the Energy Directive 2006/32/EC. This means that it should comply with communication demands that support decentralized energy production and encourage end-user energy-efficiency. Also, the functions should provide interoperability with additional applications, such as measuring the gross energy produce and energy management systems.[60] Measures that were detrimental for consumers in the NTA did not reappear in this Order in Council. For example, it keeps the possibility open to measure own produced energy. The Order also prescribes open standards for the meter. This implies that all parties can be part of the process, and anyone can use the standard free of charge.

IV. The Lessons for Future Processes of Standardization

1. Comparing the Dutch and the EU Case

The Dutch case demonstrates that mistakes in the preparatory phase have high impact on implementation of tools for renewable energy. These lessons can be helpful for other countries when preparing for the rollout. Below we will now compare differences and similarities in the Dutch and the EU case to understand the risks that arise regarding the protection of public interests.

To start with, the procedure of the Dutch Smart Meter rollout went quite unstructured. The underlying aims of the rollout changed numerous times during the discussion. It started with the national aim to improve the demand and response of small consumers. Some years later, the aims of the meter were described as providing an opportunity for the energy supplier to offer additional energy services to consumers, and to help the DSO's to optimize the network. Later on, the advantages for the consumer of energy awareness were mentioned, yet the actual purpose of the rollout was considered to be a mitigation of administrative burdens in the energy market. Parliament stressed the opportunity to contribute to a more sustainable energy based future. In more recent documents the Smart Meter is largely viewed as the first step towards smart grids.

Moreover, procedural gaps caused uncertainty. The responsible Ministry lacked to give a clear mandate to NEN to produce the standard. From the start it was clear that an Order in Council would provide the guidelines for the functions with which the standard should comply. However, this Order was not published until February 2011. Hence, at the time when the NEN developed the standard, there was no clear framework in which they could safely develop the standard. Furthermore, the policy of the responsible Ministry lacked structure as to the aims that should be achieved with the Smart Meter, making guidance of the standardization process impossible even if the Ministry would have attempted it. Above all, the absence of democratic legitimacy through involvement of the parliament in the determination of the functions of the meter resulted in a standard that was deprived of important functions for energy efficiency and local renewable energy production. Parliament had no formal powers to influence the standard for the meter before the Order was introduced.

At the European level the policy framework for the meter, at least on paper, was more consistent. First of all, in Directive 2006/32/EC the purpose is clearly defined: it is to enhance the cost-effective improvement of energy end-use efficiency in the Member States. Next to that, through the mandate M/441 to CEN/CENELEC and ETSI the Commission provided a clear framework for standardization. The mandate explicitly refers to the definition provided by Directive 2006/32/EC. Moreover, it refers to the New Approach directive 2004/22/EC,[61] which means the standard needs to fulfill the essential requirements of that directive. Finally, the EU mandate indicates that personal data protection under Directives 95/46/EC and 2002/58/EC should be taken into account as well. The mandate also contains statements about the architecture of the meter. Moreover, the New Approach directive concerns regular meters and therefore will not provide Smart Meter specific requirements. Finally, apart

59 *Ibid.*, Annex A.

60 Annex *Kamerstukken II* 2010/11 32373 No. 11, pp. 2–3.

61 Directive 2004/22/EC on measuring instruments, OJ 2004 L 135.

from the legal acts concerning privacy and measuring instruments the mandate refers to, the mandate itself has no legal force.[62]

In comparison, the EU has paid more attention to procedural requirements. It is important to point out, the Commissions' obligation to involve certain representatives of public interest as consumers, environment and labor associations in the process. Although it does not mean that these interests will actually be translated in the final standard, it is an important source of information and deliberation that otherwise would be lost.

On the other hand and similar to the Dutch case the comments from parliament concerning the functions of the meter had no impact on the mandate, which therefore lacked democratic legitimacy as well.

All in all, procedural safeguards are provided for at the EU level, where in the Dutch case procedural design was practically absent. Although better in design, the EU procedure does not provide the necessary safeguards to ensure Smart Meters to contribute to EU policy of renewable energy and energy efficiency goals. Nor does it provide enough protection for personal data or other end-user interests. This means that the meters based on the future European standards can come across the same public resistance as in the Dutch case. In the next section we will touch upon some potential solutions for future Smart Meter standardization.

2. Essential Requirements and Principles of Good Governance

As is clear from the Dutch case, making sure the meter benefits the end-user not only serves the interests of the consumer, the rollout also depends on their cooperation. If there is too much resistance the whole process can be delayed. If the involvement of representatives of public interests during the process is complicated or even unfeasible, other solutions must be explored.

The best lesson that can be learned from the Dutch case is that a pre set framework for standardization is needed to guide the process. This lesson was learned the hard way, but eventually this framework was set up to cover the minimum requirements for the meter functions. Not only does such a framework provide structure, it also provides democratic legitimacy. In the end, the Order in Council was open for parliamentary comment, and therefore the people's representatives were able to verify it. The same goes for the European situation. Even though the mandate states relevant aspects that should be taken into account, and moreover, relevant EU directives need to be considered in the process, these do not provide enough safeguards to guide the process. A new directive concerning Smart Metering and Grids in line with the New Legislative Framework could work to ensure relevant comments of Parliament and Council, as well as providing a solid structure on which these standards can be developed. This is the only currently available approach to assure the inclusion of essential requirements necessary for public acceptance and the transition to more renewable energy.

For now, in the absence of a New Approach Directive, the standardization processes needs to continue, and it would be advisable to find a temporary solution. Reliance on principles of good governance could help to form an appropriate reference frame to guide the standardization process. In the context of this article we can only touch upon a few legal and political arguments that support this approach.

Standards constitute a delegation of legislative powers and thus require legitimacy. Therefore SDO's ought to comply with norms of administrative lawmaking, even though formally they cannot be regarded as administrative authorities.[63] It has, therefore, been argued that standardization should answer to the requisites of input and output legitimacy. Output legitimacy can be derived from an institutional system's "capacity to solve problems requiring collective solutions" where a common interest in arriving at such solutions prevails.[64] In our case, it requires that all interests are considered in the definition of the mandate and that the standardizing process is governed by

62 Patrick van Eecke, Paulo Pinto Fonseca, and Tineke Egyedi, *EU Study on the specific policy needs for ICT standardization,* Final Report (Brussels, July 2007), at pp. 63–64.

63 Schepel, *The Constitution of Private Governance: Product Standards in the Regulation of Integrating Markets*, *supra* note 6, p. 248.

64 Fritz Scharpf, *Governing in Europe: Effective and Democratic?* (Oxford: Oxford University Press, 1999), at p. 13.

norms of good governance.[65] Pursuing good governance is an effective way to legitimize decision-making processes in general.[66]

In the general guidelines for cooperation between the European commission and the SDO's, the principles of good governance shine through. Principles of participation, transparency and openness should form the basis of standardization activity according to these guidelines.[67] The problem is, however, that these guidelines form political documents and do not provide the necessary legal force for regulatory standards.[68] Actual rules for "good standards" for SDO's to comply with therefore do not exist.

As is clear from the Smart Meter case described above, the danger of not including public interests in the development of standards is that individual rights can be violated. In this case the violation of the right to privacy was a prominent flaw in the standardization process. Once more, this violation arose because the parties involved in the process had a mostly commercial and technical interest in setting the standard and did not have any obvious incentives to protect the position of the consumer. The good governance principle of effectiveness may offer a good safeguard against infringements of rights. It requires an elaborate evaluation of future impact of decisions. With regard to evaluating future privacy impacts, for example "privacy by design"[69] ensures that privacy protection is taken into account at the design stage of products. This also applies for the stage of standardization.[70] Even without the principle of effectiveness the obligation to incorporate privacy rights in decision making processes already exists in Dutch law as well as in European law.[71] Evidently, these rules are not sufficient to offer adequate protect ion in privacy issues during the standardization process. Therefore, the principle of effectiveness can contribute to the protection of the right to privacy. Procedural rules to include a test of future impact on the legitimate interests and rights of individuals, like the principle of effectiveness, can contribute to the protection of the right to privacy.

Another relevant principle for standardization is the principle of openness, which relates to the way in which institutions communicates about their decision-making. At the moment, the standard development organizations (SDO's) procedures are in most cases carried out behind closed doors, as was the case in the NTA procedure. Information about the substance of the deliberations during the standardization was not made public. The process on EU level is slightly more open as the SM-CG provides reports on the progress of standardization. Openness would also mean that the draft standards are publicly available for comments. However, as a general rule these drafts are only available for purchase, which raises a barrier to actually obtain the document in question. As this principle also requires that decisions are made available to the public in an understandable way, this would mean that open standards, denoting royalty free standards, have to be developed that are free and publicly available.

The most important consequence of the application of principles of good governance, in the absence of the New Approach Directive for Smart Meters, is that it forces the parties in the standardization process to take public interests into account, next to their own commercial interests.

V. Conclusions

As standards determine the possibilities and impossibilities of the Smart Meter, it is crucial that standards encompass possible benefits for consumers and other public interests, and not merely the benefits for relevant market parties.

The absence of a framework or set of safeguards in the standardization process to protect public interests can be very harmful for both the interests that are violated and the process itself. The viola-

65 Eric Iversen and Raymund Werle, "Standardization and the Democratic Design of Information and Communication Technology", 17(2) *Knowledge, Technology and Policy* (2004), pp. 104–126.

66 Daniel Esty, "Good Governance at the World Trade Organization: Building a Foundation of Administrative Law", 10(3) *Journal of International Economic Law* (2007), at p. 509.

67 General Guidelines for the Cooperation between CEN, CENELEC and ETSI and the European Commission and the European Free Trade Association, 28 March 2003.

68 Commission staff working document, "The challenges for European standardization", p. 8.

69 This means safeguarding privacy at the design phase, see for example Peter Schaar, "Privacy by Design", 3(2) *Identity in the Information Society* (2010), pp. 267–274.

70 For example Joint ANEC/BEUC Position: *Smart Energy Systems for Empowered Consumers*, 2010, p. 9.

71 For example Art. 13 WBP and Recital 46 of Directive 95/46/EC on the protection of individuals with regard to the processing of personal data and the free movement of such data, OJ 1995 L 281/31.

tion of the right to privacy caused a true revolt against the rollout of the Smart Meter in the Netherlands. Also, the public interest of energy efficiency did not come through in the standard, because, among other things, there was no consumer display in the standard. These are just examples of what can go wrong in setting standards without any framework to guide the process in the right direction.

Finally, it is unwise to trust technicians who develop these standards to safeguard public interests just because it would be "the right thing to do". Even if they have the best interests at heart, technicians are not supposed to think about public interests. This is the area of legal and political scholars. Still, we entrust them with an important part of our future energy system without providing proper guidelines for a secure sustainable system that allows citizens to participate in the energy market without any detrimental effect for health, privacy etc. It is high time that lawyers and politicians set out for this area of technology and share knowledge to the advantage of the public good.