Downloaded from UvA-DARE, the institutional repository of the University of Amsterdam (UvA)
http://dare.uva.nl/document/172163

File ID	172163
Filename	Chapter 8: SMD in practice

SOURCE (OR PART OF THE FOLLOWING SOURCE):

Type	Dissertation
Title	Dynamic delay management at railways: a Semi-Markovian Decision approach
Author	A. Al-Ibrahim
Faculty	Faculty of Economics and Business
Year	2010
Pages	xii, 233
ISBN	978 90 3610174 5

FULL BIBLIOGRAPHIC DETAILS:
http://dare.uva.nl/record/338751

Copyright

It is not permitted to download or to forward/distribute the text or part of it without the consent of the author(s) and/or copyright holder(s), other than for strictly personal, individual use.

UvA-DARE is a service provided by the library of the University of Amsterdam (http://dare.uva.nl)

Chapter 8

SMD in practice

In the previous chapters it has been shown how railway conflict situations can be modelled as a SMD model. The aim of the model is to resolve train conflicts in a dynamic way while its main application is a timetable-free situation. Such situation is likely to occur in the near future at least in the busiest area of The Netherlands (for more on this we refer to Section 1.2). The purpose of this chapter is to examine whether such a model can be applicable for the current situation where timetables are a common practice. Although the SMD model is primarily designed for the timetable-free environment and the assumed arrival process will not reflect the arrival process found in the situation with the timetable, the model certainly has a number of powerful features[1] which can make it achieve good results in practice and result in a powerful strategy that can be used for dynamic conflict resolution.

Presently, ProRail, the Dutch railway infrastructure manager, uses the so-called TAD rules to resolve train conflicts. TAD stands for Trein AfhandelingsDocument (Dutch for Train Management Document). It is a document containing conflict resolution rules to be applied whenever a conflict between trains occurs. ProRail is interested in comparing the performance of the TAD strategy with other strategies.

In coordination with ProRail, a test case has been selected to test the performance of the SMD model within a real-life environment. This test case involves the line segment Utrecht - Gouda which is known to have plenty of conflicts, and where according to ProRail, TAD rules do not always give satisfactory results.

The main questions to be analysed are: (1) is it possible to model this real-life situation with the SMD model? (2) how does SMD model perform? (3) is it better than TAD?

[1] These features are the ability of the model to incorporate important factors into the decision making such as the situation on the arrival tracks and the destination track, the acceleration rate of the trains and statistical information about future arrivals.

and (4) can it be used as a substitute for TAD?

We will start this chapter by analysing the line segment Utrecht - Gouda (Section 8.1). Then, in Section 8.2 we will explain how the train conflicts, on this line segment, are solved in real life using TAD rules. In Section 8.3 the modelling of this line segment is explained. The discussion about the simulation study and the results are found in Section 8.4, after which the SMD decisions will be explained in Section 8.5. Conclusions are given in Section 8.6.

8.1 Line segment Utrecht - Gouda

The line segment Utrecht - Gouda is one of the busiest line segments of The Netherlands. The line contains Utrecht Central station which is the largest train station of The Netherlands and is the central hub where passengers can change trains carrying them to different areas of The Netherlands and abroad. Moreover, the line is being heavily used by freight trains coming from and heading towards the Rotterdam harbour, which is the largest port in Europe and an important transit point.

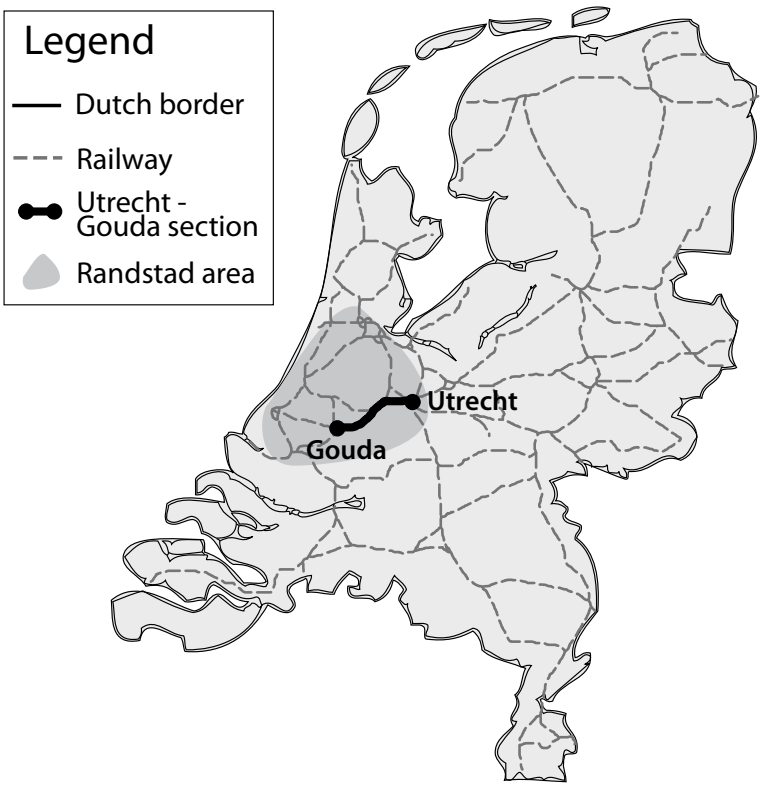

Figure 8.1: Line segment Utrecht - Gouda

The lay-out of the line segment is given in Section 8.1.1. Other characteristics like the

timetable which is being used and the delays which have been historically recorded on the segment, are given in Sections 8.1.2 and 8.1.3.

8.1.1 Lay-out of the line segment

The Figure 8.2 shows the lay-out of the line segment. It contains six stations: Utrecht, Utrecht Terwijde, Vleuten, Woerden, Gouda Goverwelle and Gouda. Additionally, there are two special locations: Harmelen Aansluiting and Oudewater Wachtspoor. At Oudewater Wachtspoor there is a possibility to set aside freight trains so that these can be overtaken by passenger trains. Next at Harmelen aansluiting some traffic from Gouda leaves the line segment to head towards Amsterdam. On the other hand, at this location some traffic from Amsterdam enters the segment to head towards Gouda. Also at Woerden station a number of trains leaves/enters the line. These trains head towards and come from Leiden station.

Throughout this chapter the different locations will be abbreviated using the ProRail convention. The following table lists the locations together with their abbreviation:

Abbreviation	**Location name**
Gd	Gouda
Gdg	Gouda Goverwelle
Odw	Oudewater
Wd	Woerden
Hmla	Harmelen aansluiting
Vtn	Vleuten
Utt	Utrecht Terwijde
Ut	Utrecht

Table 8.1: List of abbreviations

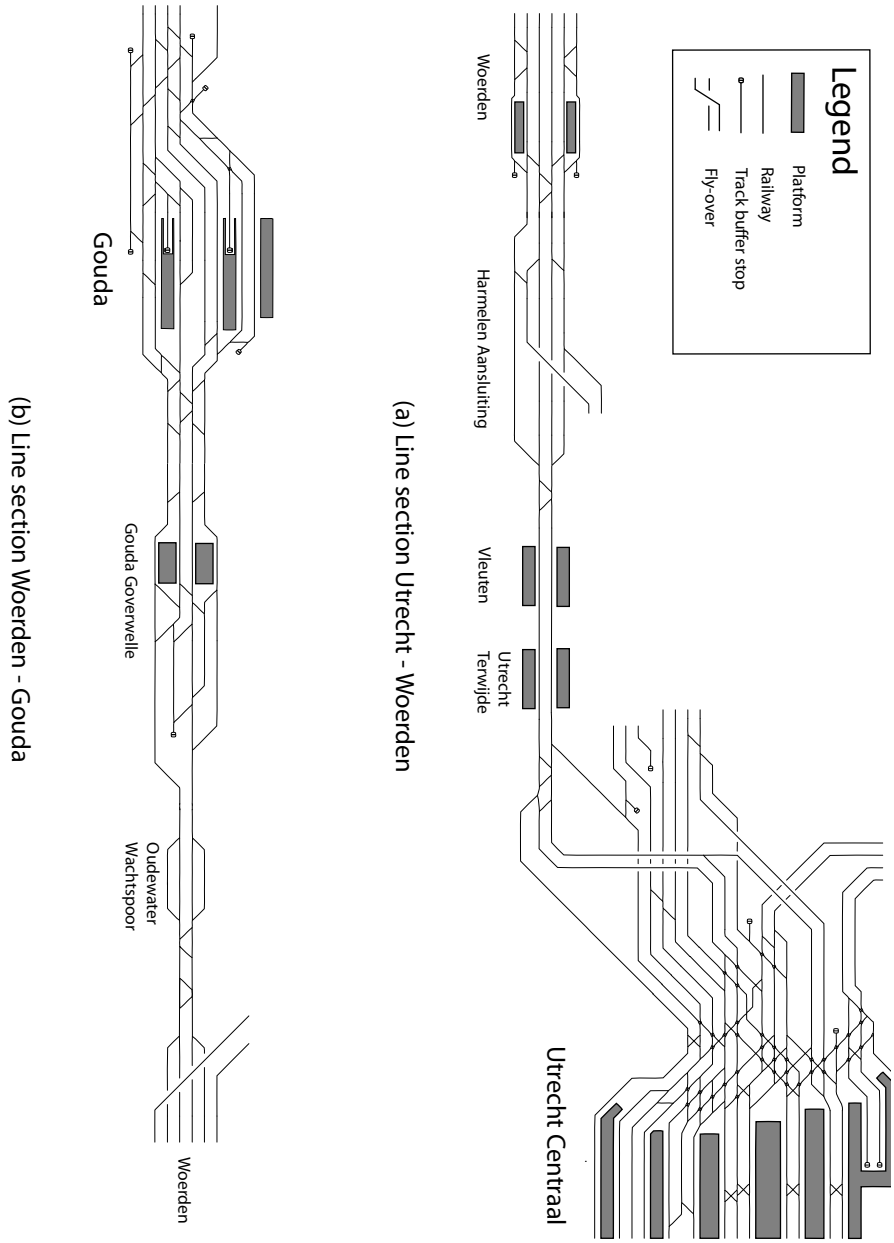

Figure 8.2: Line segment Utrecht - Gouda shown in two parts: part *a* depicting the Utrecht - Woerden segment and part *b* depicting the Woerden - Gouda segment. The Figure is based on data from maps of ProRail and www.sporenplan.nl

At first glance the area looks quite complex. The area consists of a lot of tracks, switches and complex stations. However, by examining the routes the different train services take while crossing the area we can state that the Utrecht → Gouda traffic does not intersect the paths of the Gouda → Utrecht traffic. This is the case under normal circumstances where the whole infrastructure is available (no track segment is temporarily down due to maintenance or malfunction). This fact already cuts down the size of the problem considerably since only half of the tracks need to be modelled simultaneously. On the other hand a lot of switches that the trains can take to change between the tracks are used only if the normal route of the train is unavailable. Again, these switches can be ignored here.

We want to stress here that the main purpose of the research, described in this thesis, is the delay management through the Semi-Markovian decision processes. The delay management problems arise from perturbations in the timetable. When a track segment is unavailable due to maintenance or malfunction other problems arise, which are known under the name disruption management. These problems often involve train reroutings, cancelling of train services, or determining extra stop locations for existing train services to handle the passenger flows. These problems are outside the scope of this research.

When taking the above factors into consideration, the complex area shown in Figure 8.2 can be decomposed into a number of smaller problems which can be handled by the SMD model. We will explain how the area is decomposed in Section 8.3 when we will be talking about the modelling of the area.

8.1.2 Timetable

The trains follow the predefined timetable while moving through the area. In The Netherlands, the timetable has an hourly pattern which means that exactly the same timetable is repeated every hour. The detailed timetable for this line segment for the year 2007 is given in Tables 8.2 (for the direction Gouda to Utrecht) and 8.3 (for the opposite direction).

The times in the timetable are given in the format Arrival time / Departure time, (e.g. Each hour, train service 500 arrives at Gd at minute 54. It halts there for one minute and leaves the station at minute 55. It then arrives at the next station at minute 57. Since the train does not halt at Gdg, it leaves the station immediately. If the train service does not run through some station, the corresponding times are depicted as '-' (e.g. train service 4000 leaves the line segment Gouda - Utrecht at Hmla). Moreover, the departure time of the train service 9700 is omitted since the service terminates at Gouda Goverwelle (Gdg)

Service	Type	Gd	Gdg	Odw	Wd	Hmla	Vtn	Ut
500	IC	54/55	57/57	59	05/05	07	09	15/20
1700	IC	24/25	27/27	29	35/35	37	39	45/50
2000*	IC	10/11	13/13	16	21/21	23	25	27/31
2800*	IC	37/38	40/40	43	47/47	49	51	56/01
8800	IR	–/–	–/–	–	24/26	29	32	39/56
9800*	R	50/51	54/59	03	08/09	12	15	23/36
12500	IC	51/52	54/54	56	02/02	04	06	12/17
12700	IC	21/22	24/24	26	32/32	34	36	42/47
4000*	R	14/15	17.5/18	22	27/28	31	–	–/–
9700	R	27/29	02/–	–	–/–	–	–	–/–
KKE10D	FR	33/33	35/35	39	46/48	55	59	05/05
BK10D	FR	33/33	35/35	39	45/48	55	–	–/–
KE20D	FR	03/03	05/05	09	16/18	25	29	35/35
EK20D	FR	03/03	05/05	09	15/18	25	–	–/–

Table 8.2: Timetable for trains moving from Gouda to Utrecht. Train service with a star behind the name runs twice per hour

station. None of the train services halts at Odw or Hmla, so one time indication suffices. At Vtn the regional trains only halt for half a minute so only the departure times are given.

The column Type shows the type of the train service as is defined by ProRail: IC stands for the Intercity train service which only halts at Gouda and Utrecht. IR is the Inter-regio train service which usually has some more stops than the Intercity service. In our case, the train stops at Utrecht and at Woerden. R stands for Regional train service which stops at every station while FR is the freight train.

The star behind the name of a train service indicates that this train runs twice per hour. So the pattern of these trains is repeated every half hour instead of each whole hour as is the case for the rest of the trains. A series of successive time stamps of a train service is referred to as a *path*. Unlike the paths of the passenger trains, the paths of the freight trains are not always utilized since the freight trains will only run when there are goods to be transported. Moreover, the paths KE20D and EK20D can not be used simultaneously. Depending on the destination of the freight train, the corresponding path will be assigned. The same holds for the paths KKE10D and BK10D.

According to the timetable, the freight trains are scheduled to be overtaken at Woerden. In both directions, the freight trains halt there for several minutes. In practice, this

Service	Type	Ut	Vtn	Wd	Odw	Gdg	Gd
500	IC	40/45	50	54/54	59	02/02	04/05
1700	IC	10/15	20	24/24	29	32/32	34/35
2000*	IC	23/29	34	39/39	43	46/46	49/50
2800*	IC	57/03	08	12/12	16	19/19	22/23
8800*	IR	39/56	01	07/08	-	-/-	-/-
9800*	R	53/06	13	20/21	26	30/35	38/40
12500	IC	37/47	53	58/58	62	05/05	08/09
12700	IC	07/17	23	28/28	32	35/35	38/39
4000*	R	-/-	-	02/03	07	11.5/12	15/16
BK10D	FR	20/20	28	36/45	50	54/54	57/57
EK20D	FR	50/50	58	06/15	20	24/24	27/27

Table 8.3: Timetable for trains moving from Utrecht to Gouda. Train service with a star behind the name runs twice per hour

is not always the case since very few freight trains run on time. Some of these delayed trains are then overtaken at Oudewater and others are not overtaken at all. The freight paths BK10D and EK20D can be utilized by both trains heading from Utrecht and trains entering the line segment at Woerden. In the latter case the paths are not utilized between Utrecht and Woerden.

To ensure that small disturbances not immediately lead to delays, *Time supplements* and *Buffer times* are usually inserted into the timetable. The Time supplement is the difference between the minimal time that the train needs to complete a process and the scheduled time for that process, while the Buffer time is the difference between the minimal time between two consecutive trains and the scheduled time between these two trains. While the buffer times can be calculated from the timetable, the time supplements are depicted in Tables 8.4 and 8.5. The time supplements of the freight trains are unknown to ProRail since this data heavily depends on the type of the locomotive that is being used, the number of carriages and the mass of the train. In accordance with ProRail it has been decided to set the time supplement of freight trains to zero minutes.

From Table 8.4 one can see that time supplements can be negative. This indicates that the scheduled times are so tight that the train cannot possibly respect them. The train will get delayed, usually however, the following time supplement is positive so that the train can make up for the earlier delay.

Train service	Gd	Gdg	Odw	Wd	Hmla	Vtn	Ut
500	0	0	-0.8	2.3	0	0.2	0.8
1700	0	-0.1	-0.7	2.2	0	0.2	0.8
2000	0	-0.1	0	1.3	0	0.2	0.8
2800	0	0	0.2	0.3	0	0.2	0.2
8800	-	-	-	0	0	1	2.2
9800	0	0.2	5.1	0.4	0	0.3	0.7
12500	0	0.1	-0.6	2.3	0	0.2	0.8
12700	0	0.1	-0.6	2.3	0	0.2	0.8
4000	0	0	0.7	0	0	-	-
9700	0	-	-	-	-	-	-
BK10D	0	0	0	0	0	0	0
EK20D	0	0	0	0	0	0	0

Table 8.4: Time supplements (in minutes) for trains moving from Gouda to Utrecht

Train service	Ut	Vtn	Wd	Odw	Gdg	Gd
500	0	-0.1	0.2	1.3	0.2	-0.8
1700	0	-0.1	0.2	1.3	0.2	-0.8
2000	0	-0.3	1.1	0.3	0.4	0.9
2800	0	0.2	0.2	0.3	0.4	0.3
8800	0	0	1.1	-	-	-
9800	0	-0.8	1.3	0.1	0.3	4.4
12500	0	1.3	1.2	0.3	0.4	1
12700	0	1.3	1.2	0.3	0.4	1
4000	-	-	-	-0.6	1	0.5
BK10D	0	0	0	0	0	0
EK20D	0	0	0	0	0	0

Table 8.5: Time supplements (in minutes) for trains moving from Utrecht to Gouda

8.1.3 Historical delays data

Historical data show that the trains enter the line segment Utrecht - Gouda with some delay and leave the area with an even larger delay. To identify the magnitude of the delays, a period has been selected which most likely will offer representative data. Because the

delays are timetable dependent, only the months of the year 2007 are inspected. It appears that the month March has the lowest probability of unusual events to appear (being it weather related, or holiday related). Table 8.6 presents the means of these delays per train service measured at the stations where the trains enter the Utrecht - Gouda line segment.

The passenger trains have typically delays of a couple of minutes. The mean delays of the freight trains are however difficult to obtain. Normally, the freight trains make a reservation on some path and utilize it as specified. However, in a lot of the cases, the trains will run on a different path than stated in the reservation. The difference in the time is some times up to a day. Obviously, this time difference can not be seen as a delay since the train has not been delayed on the railway track but simply has begun its journey at a different time. In other cases, especially with international trains, the delays can be up to a couple of hours. Since there is no data about the causes of freight train delays, the mean delay that we will use in this thesis depends on the definition of the delay itself. In accordance with ProRail it has been decided to define different scenarios with different values of the freight train delays.

Direction Gouda → Utrecht		Direction Utrecht → Gouda	
Train service	**Delay at Gouda**	**Train service**	**Delay at Utrecht**
12500	47	12500	67
12700	40	12700	78
2000	94	2000	48
500	103	500	54
1700	123	1700	84
2800	51	2800	36
4000	61	8800	65
9700	62	9800	78
9800	80	Freight	?
Freight	?		
Train service	**Delay at Woerden**	**Train service**	**Delay at Woerden**
8800	84	4000	62

Table 8.6: Measured delays of various train services in March 2007. The delays are in seconds and are averaged over the trains running the train service

8.2 The TAD conflict resolution rules

The TAD rules are constructed off-line every time a new timetable is released. When a conflict occurs, the train dispatcher looks up the corresponding rule and applies it. This way, the TAD rules are used as a reference book. The rules typically consider two to four trains at a time and ignore the rest of the trains in the area. Moreover, the rules are written from the perspective of one train. If that train is delayed, then the train order might change.

Train	**To**	**Arrival time**	**Minimal delay**	**Maximal delay**	**Train order**
4000	Gd	-.03/-.33	0	6	4000 - 2000 - 2800 - FR
4000	Gd	-.03/-.33	6	10	2000 - 2800 - FR - 4000

Table 8.7: Example of a TAD rule

Table 8.7 depicts an example of a TAD rule. The rule specifies that train service 4000 should be the first one to depart towards Gouda (Gd) if the train is delayed up to 6 minutes. If its delay is between 6 and 10 minutes, the train should let train services 2000, 2800 and the freight train go first.

In case more than one train is delayed at the same time, the delays of Table 8.7 should be interpreted as relative delays. So if a train of service 2000 is two minutes delayed, the train service 4000 will go first when delayed up to 8 minutes.

The TAD rules for line segment Utrecht - Gouda can be found in appendix B.

8.3 The modelling

To model the line segment Utrecht - Gouda, one first needs to decompose it into manageable sub-areas, each containing exactly one conflicting area. In Section 7.2 we have already discussed the decomposition of the large area and the scope of the junctions. In this section we will explain how this is applied to the line segment Utrecht - Gouda.

Let us look at the various decisions that need to be made on the line segment in the direction Utrecht → Gouda. In the first place a decision must be made about the order of the trains that leave Utrecht. This order is then fixed up to Woerden. So the first area naturally will be Utrecht - Woerden. This area is depicted in Figure 8.3 as area 1. At Woerden some trains leave the line segment Utrecht - Gouda in the direction of Leiden while new trains enter the line segment at Harmelen aansluiting to run towards Gouda.

Woerden has three platforms allowing trains to overtake each other, so the decision that needs to be taken is about the order of the trains that leave Woerden towards Gouda. Since the order of most of the trains is fixed up to Gouda, the borders of the area will be Woerden - Gouda. This area is depicted in Figure 8.3 as area 2. At Oudewater there is a possibility to set aside a freight train so that it can be overtaken by passenger trains. In practice, this does happen occasionally. So the decision here will be about whether to set aside the freight train or not. This results in the last area which is depicted as area 3 in Figure 8.3.

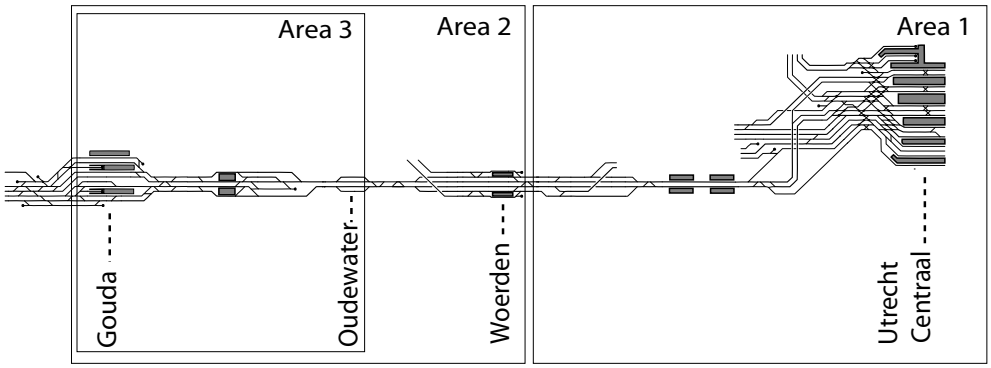

Figure 8.3: The sub-areas of the direction Utrecht → Gouda (the trains run from right to left)

When looking at the opposite direction, the following decisions can be distinguished. First of all, at Gouda one needs to decide about the order of trains that will leave the station (Area 1 in Figure 8.4). Next, at Gouda Goverwelle the halting trains join the Gouda - Utrecht route and it must be decided when these trains may enter the route (Area 2 in Figure 8.4). The third decision moment is found at Oudewater. At this location freight trains can be stopped in order to be overtaken by the passenger trains. The decision here is thus about whether to stop the freight train or not (Area 3 in Figure 8.4). Then at Woerden some regional passenger trains and freight trains leave the line segment while other regional passenger trains and freight trains will enter the segment. The decision is then about the order of these activities (Area 4 in Figure 8.4). And the final decision should be made at Harmelen aansluiting (Hmla). Here, the regional trains and the freight trains will join the inter-regional traffic to run over the same track towards Utrecht (Area 5 in Figure 8.4).

To summarize the above, there are three locations where decisions must be taken when considering the traffic from Utrecht to Gouda (locations: Utrecht, Woerden and Oudewater) while five locations are to be distinguished when looking at the traffic in the opposite direction (locations: Gouda, Gouda Goverwelle, Oudewater, Woerden and Harmelen aansluiting).

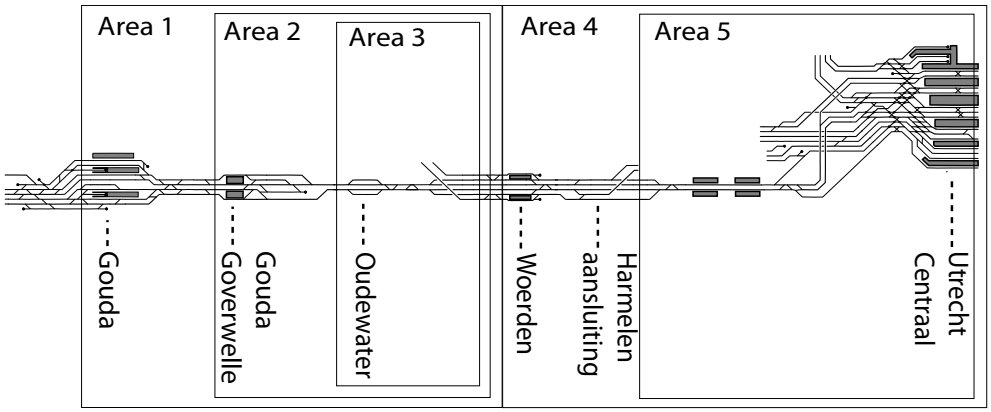

Figure 8.4: The sub-areas of the direction Gouda → Utrecht (the trains run from left to right)

The different modelling choices that are made in respect to each of these areas are explained next.

8.3.1 Utrecht to Gouda

8.3.1.1 Utrecht

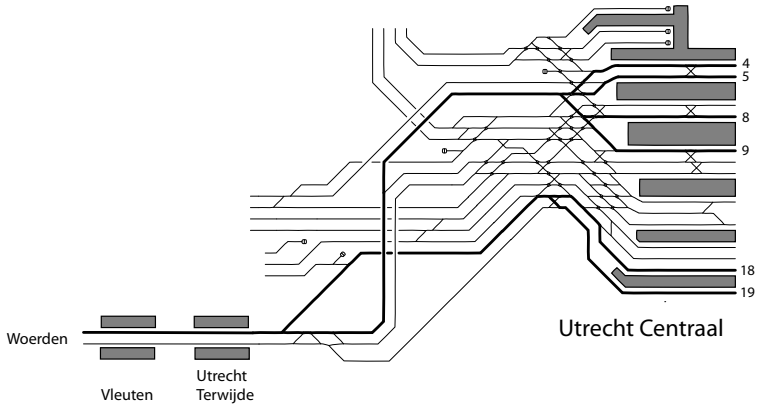

Figure 8.5: Utrecht Central station. Bold tracks are the tracks that are used by the traffic towards Gouda. The numbers at the far right represent the platform numbers

Figure 8.5 depicts Utrecht Central station. It is one of the largest railway stations of The Netherlands and is a very important hub where trains from different directions come together. There is no need to model the whole traffic as most of the trains run towards other directions without interfering with the Utrecht - Gouda traffic. Table 8.8 lists the platforms which are used by the Utrecht - Gouda traffic. The platforms 18 and 19 are the closest to Gouda. The trains that depart from these platforms do not conflict with the trains of other directions. On the other hand the fly-over located to the left of the

station allows for departure of the trains from platforms 4, 5, 8 and 9 without conflicting with the trains moving in other directions.

Train service	Platform
2800	4
2000	5
12700	8
12500	8
1700	9
500	9
9800	18
8800	19
Freight	5

Table 8.8: Platforms of the Utrecht Central station which are used by different train services

Table 8.8 implies that the freight train shares the same platform with the train service 2000. However, in practice, if the platform is occupied, the freight train will be rerouted to platform 4 or 7. To implement this we should assign the freight trains to a dedicated track. This will raise the number of tracks to be modelled to seven. It is possible to model the Utrecht station as a Fork_7 junction with six arrival tracks representing a platform and one track representing a virtual track dedicated to the freight trains. However, this way of modelling will lead to a very large state space. We will therefore aggregate some of the platforms decreasing the number of platforms to four. Table 8.9 reflects the aggregated situation:

Platform	Train services	Departure times
1	2800, 12500, 12700	'03, '17, '33, '47
2	500, 1700, 2000	'15, '29, '45, '59
3	Freight	'20, '50
4	9800, 8800	'06, '26, '36, '56

Table 8.9: Assignment of train services to platforms after aggregation

The trains are assigned to the tracks in such a manner as to ensure that the trains that in reality never conflict with each other are assigned to the same track. The idea behind this is as follows: As the output of the SMD model is the optimal order of conflicting

trains which may exit the station, finding the order of the trains which in reality never conflict with each other is a waist of computational time. By assigning such trains to the same track, the SMD model will process these trains on a FCFS basis which results in a smaller, more compact, model. As a consequence the intercity train services 2800, 12500 and 12700 are assigned to the same track. Note that their planned departure times, shown in the last column of Table 8.9 are perfectly distributed over time. The same holds for the Intercity train services which are assigned to track 2.

Since, in reality, the track to which the freight trains are assigned depends on the situation at the station, the freight trains can conflict with any of the other train services. By assigning the freight trains to a dedicated platform we will obtain a SMD strategy which will prescribe the order of the trains for all possible conflict situations involving the freight trains.

Finally, we have decided to assign train services 9800 and 8800 to the same platform since these trains are rarely in conflict with each other: the trains are planned to depart from Utrecht with a time interval of at least 10 minutes while their delay at the Utrecht station is at most only a couple of minutes. Should this delay turn out to be much higher in reality then these trains should be assigned to different tracks. Note that in our case, this modelling choice implies that, should the two be in conflict, the conflict will be solved by means of the First Come First Served principle.

All passenger trains halt at Utrecht. When more than one train wants to depart from Utrecht at more or less the same time, a conflict occurs. In this case one of the trains receives permission to leave the station while the other trains wait for it to clear the way. The penalty that the trains pay for letting another train to go first is the time the train loses compared to the situation when the train did not have to wait. In this example the penalty is exactly the amount of time the trains wait for the other train to pass first. No acceleration time loss is involved here since the trains are already halting. The time that the train needs to accelerate is not considered as part of the penalty since this amount of time will be spent on acceleration either way.

The penalty for stopping the freight train in favour of the passenger train is calculated differently. The freight trains normally do not halt at Utrecht and pass it with fairly high speeds. Stopping such a freight train means that the train will need to wait for an other train to depart from Utrecht and then start accelerating again to its desired speed. The penalty for stopping the freight train is then equal to the waiting time (time that the train waits for other train to depart from Utrecht) plus the acceleration time loss (time the train loses on accelerate compared to the situation where the train was not stopped).

Summarizing the above, the acceleration time loss for passenger trains are zero while

the acceleration time loss for freight trains depends on the speed of the freight train and is equal to couple of minutes.

The train order which is set at Utrecht will be held at least until Woerden. It is then natural to set Utrecht - Woerden as the boundaries for the decomposed area. On this line section, a lot of the train services act similar. We will therefore aggregate these train services to a smaller number of train types.

The resulting model is a fork with four arriving tracks and four train types (Intercity, Regional (9800), Inter-Regional (8800) and Freight). The destination track is 15785 meter in length. The intercity trains leave the track already after 9166 meters and move further on a separate track. Figure 8.6 depicts the lay-out of the resulting SMD model.

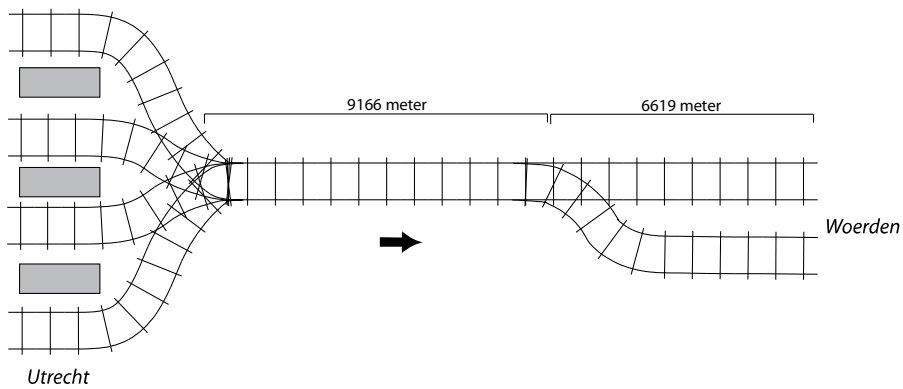

Figure 8.6: Line section Utrecht - Woerden showing four arrival tracks. Halfway through the destination track the intercity trains diverge to a separate track

As has been said earlier, not all freight paths are being utilized. From historical data we found that only around 35% of the paths have been utilized on the line segment Utrecht - Gouda. Around 57% of the freight trains pass Utrecht, the rest of the trains join the line segment Utrecht - Gouda at Woerden. With this in mind, the number of freight trains that pass Utrecht is on average 0.4 per hour.

8.3.1.2 Woerden

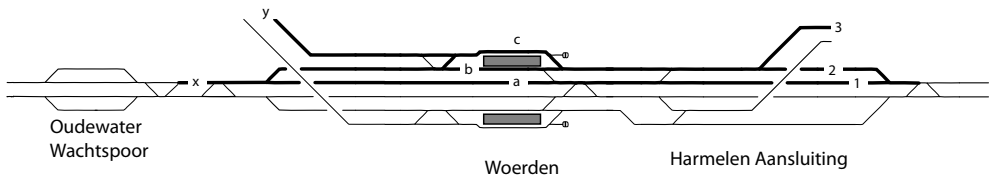

Figure 8.7: Lay-out of the Woerden station. Thick tracks are the tracks that are used by the traffic towards Gouda which is located to the left of the figure. Trains run from left to right.

Figure 8.7 depicts the lay-out of the Woerden station. The Intercity trains run via the tracks that are indicated in the Figure as tracks 1, a and x. The freight trains enter the station either via track 2 or 3 and continue their movement via tracks b and x. The regional trains which enter the station via either track 2 or 3 halt at Woerden at tracks b or c. The train service 8800 leaves the model via track y and heads towards Leiden while the rest of the regional tracks continue towards Gouda via track x. As the train service 8800 does not interfere with other trains upon leaving the Woerden station, the train will not be part of the model any more. On the other hand, train service 4000 and new freight trains enter the track section and become part of the model.

Woerden station will be modelled as a Fork_3 junction with three arrival tracks corresponding to tracks a, b and c and one destination track corresponding to track x.

Woerden has 8 kilometres of double track (tracks 1 - a and 2 - b as are depicted in Figure 8.7). This means that the trains can overtake each other without hindering each other much. The freight trains can decelerate a bit and let another train go first without getting much penalty. In order to model this we will use a three-level gradation system to indicate the train speeds on the arrival tracks (recall the speed indicator variable y from section 2.2.1). The three values of the speed indicator y will have the following meaning:

- 2 meaning that the trains on that track are running according to their speed profile and do not experience any hindrance from trains of other directions.
- 1 meaning that the trains on that track are slowed down a bit in order to let one or more trains from other directions cross the junction first.
- 0 meaning that the trains on that track are standing still in order to let one or more trains from other directions cross the junction first.

When a train on the arrival track gives some other train the right of way, the speed indicator of the track changes from 2 to 1. If, however, the train decides to let yet another train cross the junction first, the speed indicator changes to 0 meaning that the train has come to a complete stand still. The value of the acceleration time loss will then be dependent on the speed indicator of the track. Note that the acceleration time loss is only positive for the Intercity trains and the freight trains since the regional trains are halting at Woerden.

The length of the destination track is 14.4 km (the distance until Gouda). On this part of the line several train services act alike so the trains can be aggregated into a smaller number of train type groups. We will distinguish five train types on this track segment. To begin with we will distinguish between two type of Intercity trains: the train services 2000, 12500 and 12700 will be of type IC_{fast}. These train services run slightly faster than the train services 500, 1700 and 2800. The reason for this is a particular switch in the neighbourhood of the Gouda station. The switch routes the trains to different platforms. Dependent on the status of the switch the maximum speed is either 40 kilometres per hour or 80 kilometres per hour. As a consequence the IC-type of trains need to lower their speed considerably to obey the 40 kilometres per hour limit while the IC_{fast} can pass the switch with a fairly high speed. From historical data we found that the average speed of the IC_{fast} trains will be 11 kilometres per hour higher than the speed of the IC-type of trains. Next we distinguish between the Regional train service 4000, the Regional train service 9800 and the freight trains.

The regional trains leave the track after 11 km since these trains run on a separate track from Gouda Goverwelle onwards. Freight trains leave the destination track either at Oudewater or at the end of the destination track. This depends on the decision strategy at Oudewater. Figure 8.8 depicts the lay-out of the resulting SMD model.

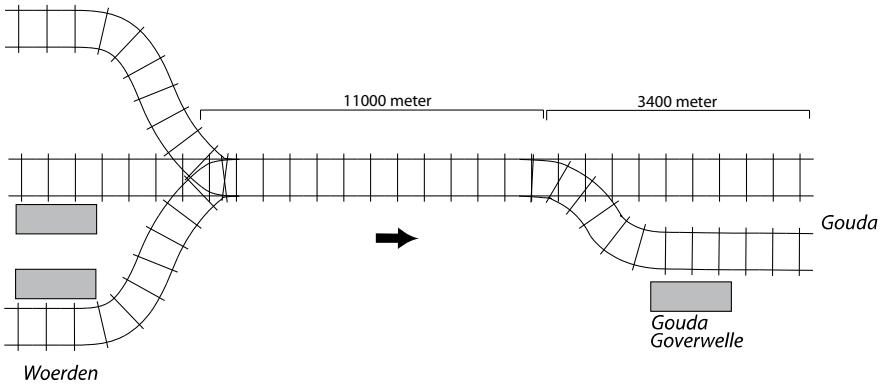

Figure 8.8: Line section Woerden - Gouda showing three arrival tracks. At Gouda Goverwelle the regional trains halt at a separate track

8.3.1.3 Oudewater

At Oudewater there is a possibility of overtaking freight trains. For a length of about one and a half kilometre there is a double track. Just long enough to put a freight train aside. As this section is so short, freight train has to come to a complete stand still. The penalty of overtaking a freight train here is therefore high, actually as high as it was the case at Utrecht.

In real life the side track at Oudewater is only used when a freight train is put aside there. In other cases the freight train runs over the same track as the other trains. In our model a freight train will always run over the side track through Oudewater. The SMD model can then decide per individual case whether the train should be overtaken or not.

The resulting model is a fork with two arriving tracks. One of them is dedicated to the freight trains and the other to the rest of the trains. The destination track is 7304 meter long. The regional trains leave the model after 3904 meters.

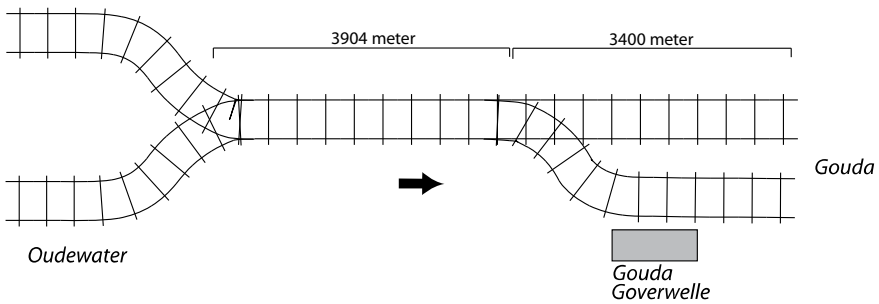

Figure 8.9: Line section Oudewater - Gouda showing two arrival tracks. At Gouda Goverwelle the regional trains halt at a separate track

8.3.2 Gouda to Utrecht

8.3.2.1 Gouda

Gouda is a fairly large station where all passenger trains halt. There are three tracks which are dedicated to the traffic towards Utrecht. In Figure 8.11 these tracks are numbered 1 to 3. Track number 1 is dedicated to the freight traffic while tracks 2 and 3 are used by the passenger trains. The regional passenger trains leave the station via track b while the rest of the trains use track a. From Figure 8.11 one can see that the regional trains that run from 3 to b (train service 9800) conflict only with regional train services which halt at track 2 (services 4000 and 9700). However, when looking at the planned departure times and the amount of delay the trains usually have at Gouda, we can state that the train service 9800 does not have any conflicts with any of the trains and can be left out of the SMD model (This train will enter the model at Gouda Goverwelle).

Now we have a model where Intercity trains can halt at either track 2 or 3, while regional trains only halt at track 2 and freight trains pass the station via track 1. In this model the intercity train can have a conflict with both regional trains and the freight trains while there is no conflict between regional trains and freight trains. These trains can leave the model simultaneously. The SMD model described in this thesis can not model this in an exact way. In Chapter 9 we will address this issue when we will be talking about possible future research areas. There we will propose possible extensions to the SMD model which will make modelling of this kind of situations possible. For now we will use an approximate model. Two approximations are possible:

- We can model Gouda via three separate models. One model describing the conflict situation between Intercity trains and regional trains. A second model describing the conflict situation between Intercity trains and freight trains and a third model describing the conflict situation between all three types of trains. The SMD strategy belonging to these three models are then to be stored in the database. When, while simulating, a conflict arises, the SMD solution of the corresponding SMD model is retrieved (e.g. when the conflict is only between an Intercity train and a Regional train then the solution is retrieved of the SMD model which describes the conflict between these two train types). This way of modelling will result in a suboptimal solution since in a number of cases not all trains are taken into account but it is still a very plausible way of modelling.

- The situation at Gouda can also be modelled by artificially adding a conflict between regional trains and freight trains. Upon such a situation the SMD model will falsely

assume that one of the trains should be delayed. In the simulation though, no conflict will be detected and the two trains can continue their trip without any delay. Now, all three kind of trains conflict with each other, the standard SMD model can be used. In this thesis, we will use this approximation.

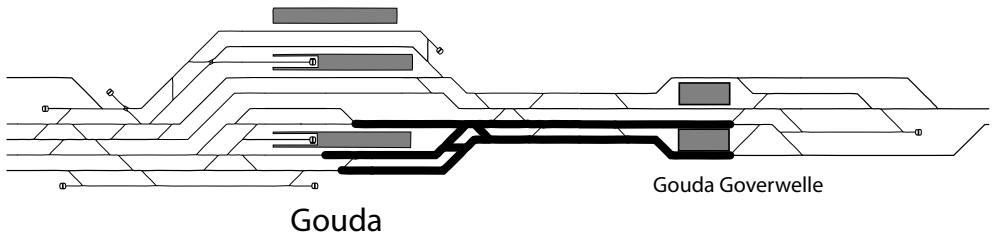

Figure 8.10: Layout of Gouda station. The thicker tracks are the tracks that are used by the traffic that runs towards Utrecht

The acceleration time loss of the passenger trains are zero since the trains are halting at the station. This does not hold though for freight trains. Normally, these trains pass the station without stopping. Stopping these trains in favour of passenger trains will cause high acceleration time loss.

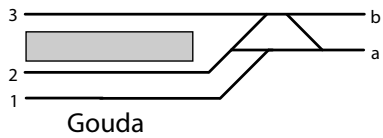

Figure 8.11: Layout of the most interesting part of Gouda

In the timetable, regional train services 4000 and 9700 are assigned to track 2 together with intercity train services 12500, 12700 and 2800. However, if a regional train service is late and prevents an Intercity train from entering Gouda station, the intercity train will be rerouted to track 3. This allows for the change in order between trains which normally are assigned to the same platform. To allow this change in order, within the SMD model, we will add a virtual track where the regional train services arrive. This way, the SMD model will have the choice of changing the order of the trains upon a conflict. So in our model, we will have four arrival tracks: one for freight trains, one for the regional trains and two for Intercity trains. The layout of the model is depicted in Figure 8.12. Since the regional trains run on a separate track between Gouda and Gouda Govervelle, these trains will not run on the destination track (the trains leave the destination track after travelling 0 meters on it). This way, these trains do conflict with the rest of the trains while leaving the station but do not delay any trains when running on the destination

track. At Gouda we will aggregate the different train services into three groups: Intercity trains, Regional trains and Freight trains.

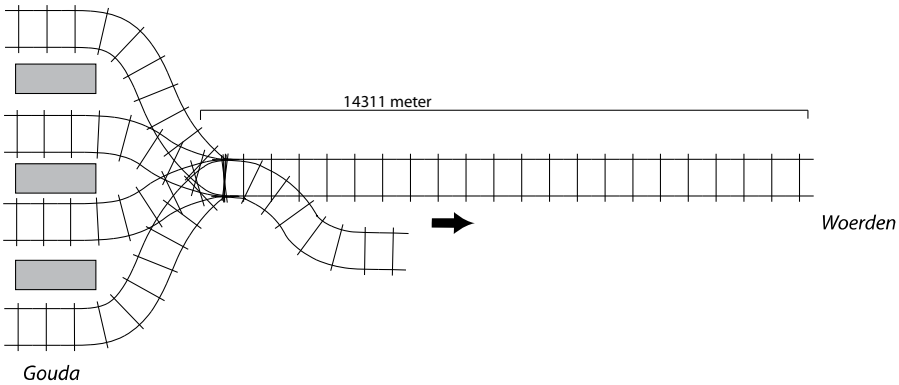

Figure 8.12: Line section Gouda - Woerden showing four arrival tracks. The regional trains leave the section directly and run until Gouda Goverwelle on a separate track

8.3.2.2 Gouda Goverwelle

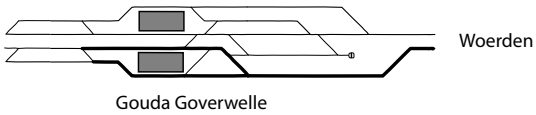

Figure 8.13: Lay-out of Gouda Goverwelle. The thicker tracks are the tracks that are used by the traffic towards Utrecht which is located to the right of the Figure

At Gouda Goverwelle two tracks are in use for the Gouda → Utrecht traffic. The regional trains use one of the tracks to halt at the station while the rest of the trains pass the station via the other track. A conflict at this station will always involve a regional train which wants to depart from the station while another train is approaching. The decision is then either to delay the regional train and let the other train pass the station without lowering its speed or to stop the approaching train and let the regional train depart first. The order of the trains is then fixed at least until Woerden where the trains can overtake each other due to a double track there. Just before Woerden, the Intercity trains will diverge to a separate track.

At Oudewater which is located 6 kilometres further down the track, there is a possibility to overtake freight trains. We can take this fact into consideration by letting the freight trains 'disappear' from the SMD model 6 kilometres into the destination track. However, since it is not known yet if the trains will be overtaken there, we choose to neglect Oudewater at this stage. The resulting model is depicted in Figure 8.14.

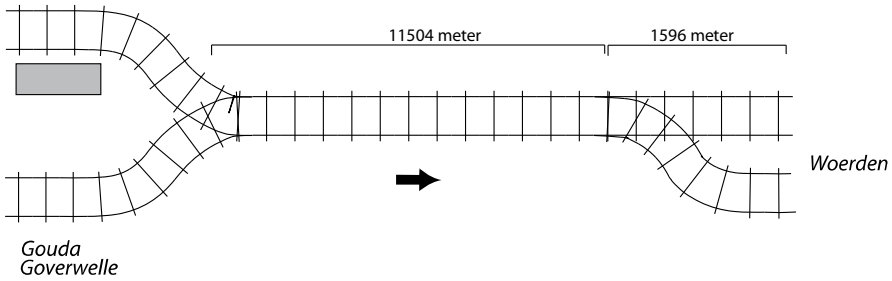

Figure 8.14: Line section Gouda Goverwelle - Woerden

8.3.2.3 Oudewater

Oudewater is a location on the line section Gouda - Utrecht where over a length of 1.5 kilometres a double track is found. This location is sometimes used to overtake freight trains. Since the double track is so short a freight train will need to come to a complete stand still in order to let another train go first. So the question to be answered here is whether it is good practice to stop a freight train, at least in some of the cases. The lay-out of the Oudewater model is depicted in Figure 8.15.

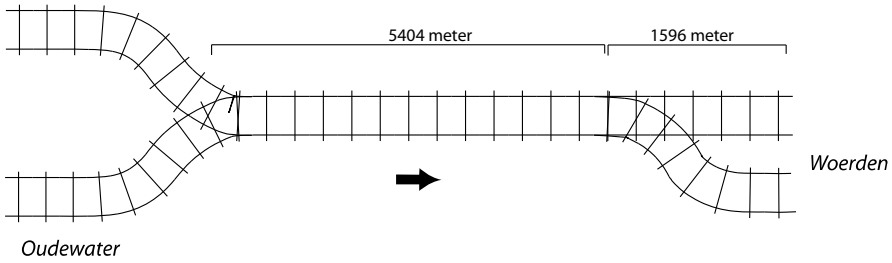

Figure 8.15: Line section Oudewater - Woerden

8.3.2.4 Woerden

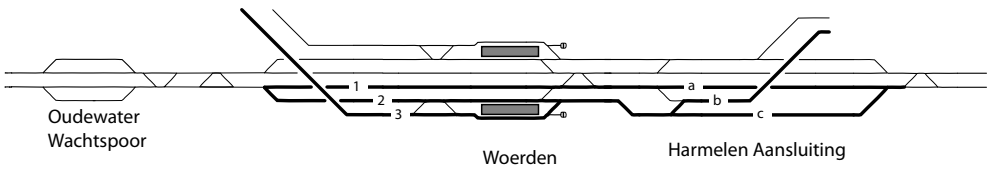

Figure 8.16: Lay-out of Woerden station. The thicker tracks are used by the traffic towards Utrecht which is located to the right of the Figure

Figure 8.16 depicts the situation at Woerden station. The thick tracks in the figure

represent the tracks that are in use by the Gouda → Utrecht traffic. The Intercity trains do not stop at Woerden and pass the station via tracks 1 and a. Normally, both regional trains and the freight trains which run between Gouda and Utrecht enter the station via track 2 and leave it via track c. However if track 2 is occupied, a freight train can overtake a halting train by using track 3.

Train service 8800 enters the line section Gouda - Utrecht at Woerden. This train service enters the station via track 3 and leaves it after halting via track c. On the other hand train service 4000 and some freight trains leave the line via track b. These trains head then towards Amsterdam.

Due to the fact that the freight trains can be rerouted via a different track, if the track they were originally been assigned to is occupied, a virtual track will be added. The resulting model is depicted in Figure 8.17 and consists of the four arrival tracks and a destination track. The length of the destination track is the distance towards Utrecht since the order of the trains can not change in the meantime. The train service 4000 and some freight trains will leave the model already after a distance of 3625 meters. Since the different services act differently at Woerden, we will not aggregate any services and will model five type of trains which correspond with the train services 4000, 8800, 9800 and the two freight trains depending on the destination (Utrecht, Amsterdam).

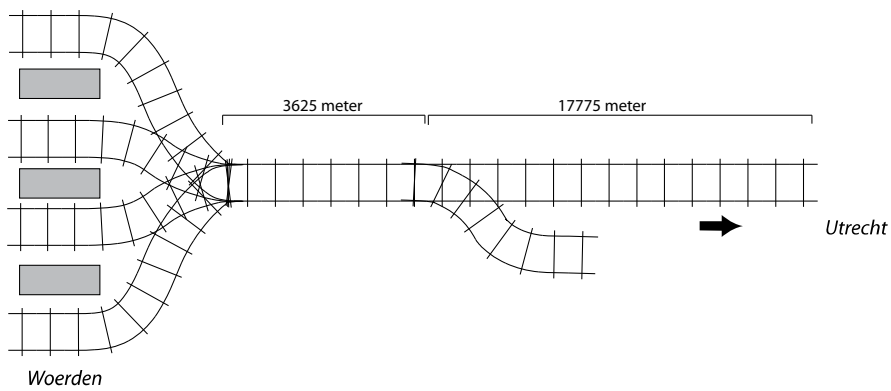

Figure 8.17: Line section Woerden - Utrecht. Halfway through the destination track a number of trains diverge towards Amsterdam

8.3.2.5 Harmelen aansluiting

At the location called Harmelen aansluiting the Intercity trains which have passed the Woerden station join the rest of the train services to run towards Utrecht. This location is thus modelled as a junction with two arrival tracks and one destination track, the length

of which represents the distance until Utrecht Central station. On this track segment four train types can be distinquished (Intercity trains, Inter-regional train service 8800, Regional train service 9800 and freight trains).

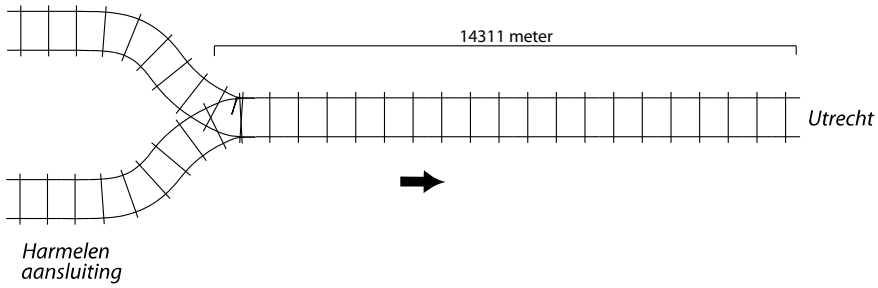

Figure 8.18: Line section Harmelen aansluiting - Utrecht

8.4 Simulation study

8.4.1 Simulation and the difference with the SMD model

After solving the models in the previous section, the local SMD strategies are obtained. These strategies are compared by means of simulation to the TAD rules and to other heuristics. In this section we want to stipulate the difference between the simulation model and the SMD model.

Timetables Within the simulation environment the timetable of the year 2007 is used. The trains however enter the line segment disturbed. The amount of this 'initial' delay differs per train service and is drawn from an exponential distribution. The means of these distribution functions correspond to the means of the historical data. The SMD model is not aware of the timetables and will assume that the trains arrive following the $\mathcal{HP}$-process.

Train speeds In principle, within the simulation environment, the trains run with planned speeds. However, when some train is delayed, the speed increases to the maximum speed until the delay is resolved.

The notion of the planned speed is closely correlated with the timetable. Each year a different timetable might be applied where the same train services can be planned with different speeds. Since the SMD model is not aware of the timetables, the planned speeds

are also unknown. Instead, the SMD model will use the *maximal speeds* that the trains can reach taking into consideration the characteristics of the trains and the maximal allowable speed on the track. Note that this is a modelling choice. We could have chosen to differentiate between trains which are on time and trains which are delayed. Then using the maximal speeds for the delayed trains and planned speeds for the trains which are on time. This has been previously discussed in Section 2.2.4 where train categories were suggested instead of train types. This will make SMD model more accurate but will increase the state space too.

Decomposed areas Within the simulation model the whole area is modelled. No decomposition is applied. Within the SMD environment, the Gouda - Utrecht line segment is decomposed into a number of areas. The SMD model is not aware of the situation at other areas.

Handling of conflicts When within a simulation environment a conflict is detected, the state, the simulation process is currently in, is translated into the corresponding SMD state. Then the corresponding SMD decision, which is stored in the database, is applied.

The translation process needs to be done carefully. Especially when virtual tracks are defined within the SMD model. These tracks do not exist in reality and are not modelled within the simulation environment. Bad translation practice can result in a SMD decision which can not be executed since there is no capacity in the area to execute it. Figure 8.19 depicts such a situation.

In the sketched situation, due to a wrong translation, three trains are found simultaneously at the arrival tracks. If the optimal decision is to give train 3 the right of way, a deadlock situation will be generated (trains 1 and 2 wait for train 3 while train 3 can not pass Woerden since both tracks are occupied by trains 1 and 2). Preventing such a situation is fairly simple. The translated state should not contain more trains than can physically fit in a certain area. In the case depicted here, train 3 should not have been part of the SMD state.

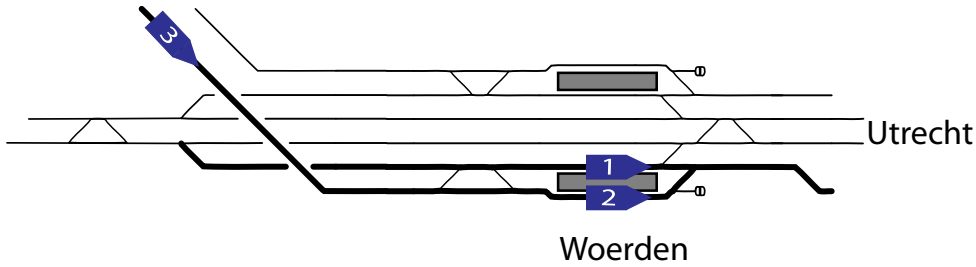

(a) Train 3 approaches Woerden station while all tracks are occupied by trains 1 and 2

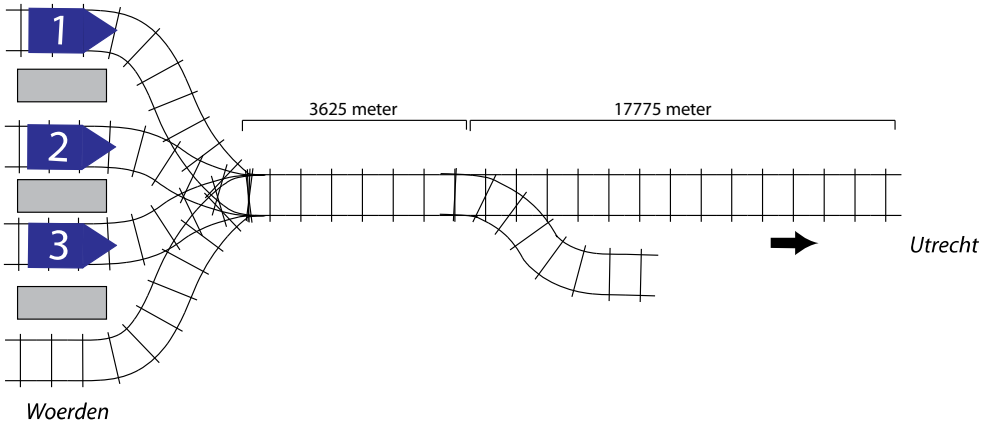

(b) Wrong translation to the SMD state showing three trains at the Woerden station

Figure 8.19: An example of a wrong state translation from the Simulation state to the SMD state. The SMD decision might lead to a deadlock situation

8.4.2 Scenarios

As has been said earlier, not all freight train data is easy to obtain. In particular, the speeds, the acceleration pattern and the initial delays of freight trains depend on a variety of factors. To get around this, different scenario's are constructed. The scenario's vary in three parameters; the maximum speed of the freight trains, the acceleration rate of the freight trains and the initial delays of the freight trains. Next to these freight train related parameters, one more parameter has been varied by, which is the initial delay of the passenger trains defined as a percentage of the historically recorded delay (i.e. 100% of historical delay, 75% etc.).

Even though these scenario's had slightly different results, the overall conclusions were comparable. In this chapter we therefore restrict ourselves to one of these cases. The characteristics of the chosen scenario are given in the following table.

Characteristics	**Value**
Speed (km/hr)	85
Acceleration time loss (in sec)	180
Initial delay (in sec)	350
Percentage of historical delay	100

Table 8.10: characteristics of the scenario

Freight trains run with 85 km/hr and lose three additional minutes as a penalty for acceleration when getting stopped. At Woerden though, where the double track is very long, the freight trains can be overtaken without delaying the freight trains much. As a consequence, the trains will adjust their speeds only a bit: The acceleration time loss will be zero if the freight train is overtaken by 1 train. If however two or more trains overtake the freight train, the train will come to a complete stop resulting in high acceleration time loss. The initial delay of the freight trains (that is, the delay that the trains have at the entrance of the Utrecht - Gouda line segment) has an exponential distribution with a mean of 350 seconds.

8.4.3 Strategies

In previous chapters we have already introduced a number of simple heuristics. The performance of the SMD strategy was compared to these simple heuristics. Within the Timetable environment it makes sense to introduce two new strategies: Least-Delayed-First and Most-Delayed-First. The prior gives the right of way to the train that has the

lowest delay. The idea behind this is to protect the trains which are not yet delayed. On the other hand, the Most-Delayed-First strategy tries to minimize the delays of trains that are already delayed by giving them priority.

8.4.4 Results Utrecht to Gouda

In Table 8.11, the average delays in seconds are given as they are registered at the different railway hubs. The average delays are the delays averaged over all train services weighted by their frequency. The begin situation (the delays at Utrecht) is equal for every strategy. The course of the delays diversifies though when the trains are further into the line segment. The performance of different strategies becomes then evident.

Discipline	**Ut**	**Wd**	**Gd**
TAD	71	82	142
SMD	71	79	114
FCFS	71	86	147
IC-IR-RE-FR	71	81	121
IC-FR-IR-RE	71	81	115
FR-IC-IR-RE	71	79	118
FR-RE-IR-IC	71	86	156
RE-IR-IC-FR	71	88	150
Follow	71	84	139
LeastDelayedFirst	71	86	140
MostDelayedFirst	71	84	141

Table 8.11: Delays of trains in seconds at different stations of line Utrecht → Gouda. The train type abbreviations are IC: Intercity, IR: Inter-Regional, RE: Regional, FR: Freight trains

When looking at the mean delays measured at the Gouda station, a few things draw our attention. The worst strategy turns out to be the FR-RE-IR-IC strategy, which gives the freight trains priority above the regional trains, and regional trains priority over the Inter-regional and Intercity trains. The FCFS strategy improves the result a little. The TAD strategy is only a slight improvement over the FCFS strategy. The performance of the Follow strategy is better than that of the FCFS strategy but the two do not differ that much. This is due to the fact that the trains follow a timetable where the arrivals are often planned to different platforms. As a result not often will a track be visited by

more than one train in a short time period. Due to saturated tracks, the Follow strategy then will resemble the FCFS strategy.

The strategies IC-IR-RE-FR, IC-FR-IR-RE and FR-IC-IR-RE have one thing in common: these strategies prioritize Intercity trains above Inter-Regional trains while Inter-Regional trains have priority above the Regional trains. These strategies perform very well. The delays of the SMD strategy are the lowest although these are not significantly different from the delays of the IC-FR-IR-RE strategy.

An interesting insight can be obtained when looking at Table 8.12 and comparing these results with Table 8.11. The punctuality of the trains at the Gouda station is the highest with the SMD strategy and the strategies which prioritize Intercity trains above the Regional trains. However, a surprising addition to this list is the LeastDelayedFirst strategy. With this strategy, 81% of the trains have a delay less than 3 minutes, however, the rest of the trains (19%) have the delays so high that the overall delay, depicted in Table 8.11 turns out to be disappointing.

Discipline	**Ut**	**Wd**	**Gd**
TAD	92	86	72
SMD	92	88	82
FCFS	92	85	70
IC-IR-RE-FR	92	89	83
IC-FR-IR-RE	92	89	82
FR-IC-IR-RE	92	89	80
FR-RE-IR-IC	92	86	74
RE-IR-IC-FR	92	87	78
Follow	92	89	76
LeastDelayedFirst	92	86	81
MostDelayedFirst	92	87	73

Table 8.12: Punctuality of Utrecht → Gouda. The train is punctual if the delay is less than 3 minutes

The gain in punctuality is 10% when the SMD strategy is compared to the TAD strategy. Table 8.13 depicts the delays of different types of trains at Gouda. The last column shows the overall delay and is identical with the value found in Table 8.11. From the Table one can see that the SMD strategy, when compared to the TAD strategy, improves considerably the delays of the passenger trains. The IC-FR-IR-RE strategy decreases the delays of both Intercity trains and Freight trains but the delays of the

	IC	RE / IR	FR	All
TAD	128	129	379	142
SMD	95	90	469	114
FCFS	152	102	355	147
IC-IR-RE-FR	90	82	688	121
IC-FR-IR-RE	88	115	427	115
FR-IC-IR-RE	114	110	212	118
FR-RE-IR-IC	201	55	212	156
RE-IR-IC-FR	148	48	757	150
Follow	138	86	445	139
LeastDelayedFirst	142	61	558	140
MostDelayedFirst	143	96	370	141

Table 8.13: Delay of different types of trains at Gouda

regional trains are considerably higher than is the case with the SMD strategy

Discipline	Gd
TAD	165
SMD	127
FIFO	160
IC-IR-RE-FR	153
IC-FR-IR-RE	141
FR-IC-IR-RE	129
FR-RE-IR-IC	166
RE-IR-IC-FR	180
Follow	161
LeastDelayedFirst	164
MostDelayedFirst	161

Table 8.14: Mean delays at Gouda station when 50% of the freight paths are utilized instead of 35%

The performance of the different heuristics is strongly related to the system configuration. If we would for example increase the number of freight trains in the system, the performance of the IC-FR-IR-RE strategy will be considerably lower. Table 8.14 shows the results when the percentage of the freight path utilisation is increased from 35% to

50%. The rest of the configuration remained unchanged.

When 50% of the freight paths are utilized, considerably more freight trains will run through the system. The IC-FR-IR-RE strategy which has performed greatly when only 35% of the freight paths have been utilized is now significantly poorer when compared to the SMD strategy. On the other hand, the SMD strategy remains on the top regardless of the percentage of the paths which are utilized. In fact, in all scenarios, we considered, the SMD strategy performed great.

8.4.5 Results Gouda to Utrecht

In the opposite direction the difference between the strategies are even larger. Table 8.15 depicts the simulation results. The worst strategies by far are the strategies that give the Regional trains priority above the Inter-Regional trains and above the Intercity trains. The FCFS and the TAD strategies have already an improvement of one whole minute, as far as the delays at the Utrecht station are considered.

	Gd	**Wd**	**Ut**
TAD	86	103	211
SMD	86	95	131
FCFS	86	120	210
IC-IR-RE-FR	86	107	133
IC-FR-IR-RE	86	99	122
FR-RE-IR-IC	86	136	272
FR-IC-IR-RE	86	92	128
RE-IR-FR-IC	86	140	267
RE-IR-IC-FR	86	145	280
Follow	86	112	195
LeastDelayedFirst	86	133	226
MostDelayedFirst	86	108	190

Table 8.15: Delays of trains in seconds at different stations of line Gouda → Utrecht

The strategies that have the lowest overall delay at the end of the line segment are again the SMD strategy and the strategies where the Intercity trains have priority above the Inter-Regional trains and the Regional trains. In fact, the IC-FR-IR-RE strategy beats the other strategies and decreases the delays by 9 seconds when compared to the performance of the SMD strategy. But as has been said before, these train-type-priority

strategies are strongly related to the system configuration. When the number of freight trains is increased, or the average speed of the trains is changed, another heuristic might turn out to be better.

Table 8.16 depicts the delays of various train types at the Utrecht station. The last column shows the overall delay and is identical with the value found in Table 8.15. When comparing the delays of various types of trains between the TAD and the SMD strategies, then it can be seen that all train types end up with lower delays with the SMD strategy. Moreover, from Table 8.17, which lists the measured punctualities, we learn that the gain in punctuality is very substantial, namely 23%.

	IC	**RE / IR**	**FR**	**All**
TAD	163	271	571	211
SMD	124	124	325	131
FCFS	203	179	642	210
IC-IR-RE-FR	97	128	912	133
IC-FR-IR-RE	91	125	705	122
FR-RE-IR-IC	334	146	309	272
FR-IC-IR-RE	108	149	308	128
RE-IR-FR-IC	322	145	366	267
RE-IR-IC-FR	316	148	882	280
Follow	186	168	632	195
LeastDelayedFirst	230	170	690	226
MostDelayedFirst	179	180	489	190

Table 8.16: Delay of different types of trains at Utrecht

Despite of a good performance of SMD, a number of heuristics (IC-FR-IR-RE and IC-IR-RE-FR) still outperform the SMD strategy and raise the punctuality at Gouda by 3 and 1 percent point respectively. To enhance the performance of the SMD strategy, the SMD model should approximate the simulation model in a better way. This can be done by differentiating between trains which are late or which are on time or by modelling the Gouda station in a more exact way. Either way, we will stick to the current SMD model and will instead state that the performance of the model can be improved even further.

	Gd	Wd	Ut
TAD	88	80	53
SMD	88	83	76
FCFS	88	77	56
IC-IR-RE-FR	88	83	77
IC-FR-IR-RE	88	85	79
FR-RE-IR-IC	88	74	46
FR-IC-IR-RE	88	84	76
RE-IR-FR-IC	88	73	47
RE-IR-IC-FR	88	73	46
Follow	88	80	64
LeastDelayedFirst	88	78	64
MostDelayedFirst	88	79	55

Table 8.17: Punctuality of Gouda → Utrecht. The train is punctual if the delay is less than 3 minutes

8.5 SMD decisions and the usage in practice

In the previous sections we have explained how a railway conflict situation can be transformed to the SMD setting and modelled as a SMD model. We then simulated the obtained SMD strategy and compared it to the TAD rules and to some other heuristics. In this section we will talk about the SMD strategy itself. What does it look like? How different is it from the TAD rules and can it be used by the train dispatchers as easily as is the case with the TAD strategy?

The raw output of the SMD strategy is rather abstract and extensive. This output is basically a list containing all possible states together with the corresponding SMD decision. As number of states can be substantial, this list can be enormous. However, it is very easy to transform this raw output to another format which is very similar to the format of the TAD rules. As a result, the train dispatchers can use and interpret these rules in more or less the same way they use the TAD rules nowadays. These rules can be part of a decision support system which will assist train dispatchers when resolving conflicts.

The SMD tables Recall that a state is characterised by a combination of x, y, z and ts variables. By applying some straightforward aggregating procedures to the database

containing the raw SMD output, we can aggregate rows, that contain the same x and decision a information but differ in y and ts values, together in to one row. Another procedure interprets these rows and comes up with the SMD tables listing only a couple of rules. These rules are often intuitive which will accommodate their acceptance by the train dispatchers. Table 8.18 depicts such SMD table. Other tables can be found in Appendix C.

Table 8.18 lists the SMD table of the Gouda station. The first column indicates that there are 23 different rules that can be distinguished at the station. The last column describes these rules while the columns in between describe the state for which the rules apply.

The columns 2 to 5 indicate the train services which are part of the state. When more than one train service is depicted within the same cell, the rule applies for a situation where one of these train services is found on that track (e.g. when on track 4 either train service 9700 or 4000 is found while the rest of the tracks is empty, then rule number 2 should be applied). The column 'Details' depicts further specifications of the state. Compare, for example, the states corresponding to rules 4 and 5. The train services on the arrival tracks are equivalent. However, the description in column 'Details' specifies that rule 4 should be applied the freight train on track 3 is in motion while rule 5 applies when the freight train is standing still.

The last column specifies the rule that should be applied. The rule contains the reference to the train service which receives permission to cross the junction together with the track number the train service is currently on (e.g. rule 5 specifies that the Freight train found on track 3 always gets priority above the train series on track 4). Some rules depend on the track speed (TS) value of the destination track: Rule 7 specifies that when the track speed of the destination track is 123km/hr or higher then the Intercity train service found on track 2 gets the right of way. If however, the track speed is lower, then the regional train service (either 9700 or 4000) gets the right of way. This rule makes sense, since in the latter case giving the Intercity train the right of way will delay both the regional train series and the Intercity train service witch will be delayed at the destination track.

Decision Support System Depending on the complexity of the conflict situation for which the SMD decisions have been obtained, the aggregation procedure can result in SMD tables which are still substantial in size. For these cases, one might decide to integrate the SMD tables into a Decision Support System. Such system will detect conflicts automatically and present the train dispatcher with the SMD decision and possibly with

a number of good alternatives. The train dispatcher can then select the most suitable resolution.

The option to present not only the best solution but also a number of alternatives is a straightforward extension since the essence of the SMD approach is about assigning the values to the alternative decisions, in a first place. Rather than storing only the best value into the database, one may choose to store the values of the alternative decisions as well. Then, the best alternatives can be selected based on these values.

The rest of the table can be interpreted in the same manner. Before moving to the next section, we would like to highlight one more rule, found in Table C.9 of Appendix C. Rule number 20 specifies that train service 8800 may overtake the freight train if the freight train is either moving full speed or is standing still while rule 21 specifies that the freight train will have the right of way above train service 8800 when the freight train is running at half speed. This is the direct consequence of the long double track segment at Woerden station. When the freight train is running full speed and the train service 8800 wants to leave the station, the freight train should slow down a bit and let the train service 8800 through first. However, if the freight train is already running half speed, then stopping would involve very high acceleration time loss. In this case, it is better to delay the train service 8800 and let the freight train go first. Finally, when the freight train is standing still, then it turns out to be more efficient to let the train service 8800 leave the station first before the freight train starts accelerating.

Nr	Track 1	Track 2	Track 3	Track 4	Details	Rule
1	-	-	-	-		Always 0
2	-	-	-	(9700, 4000)		Always 4: (9700, 4000)
3	-	-	Freight	-		Always 3: Freight
4	-	-	Freight	(9700, 4000)	FR is standing still	Always 4: (9700, 4000)
5	-	-	Freight	(9700, 4000)	FR is running	Always 3: Freight
6	-	(12500, 12700, 2800)	-	-		Always 2: (12500, 12700, 2800)
7	-	(12500, 12700, 2800)	-	(9700, 4000)		If TS=IC then 2: (12500, 12700, 2800) else 4: (9700, 4000)
8	-	(12500, 12700, 2800)	Freight	-	FR is standing still	Always 2: (12500, 12700, 2800)
9	-	(12500, 12700, 2800)	Freight	-	FR is running	Always 3: Freight
10	-	(12500, 12700, 2800)	Freight	(9700, 4000)	FR is standing still	Always 4: (9700, 4000)
11	-	(12500, 12700, 2800)	Freight	(9700, 4000)	FR is running	Always 3: Freight
12	(2000, 500, 1700)	-	-	-		Always 1:: (2000, 500, 1700)
13	(2000, 500, 1700)	-	-	(9700, 4000)		If TS=IC then 1: (2000, 500, 1700) else 4: (9700, 4000)
14	(2000, 500, 1700)	-	Freight	-	FR is standing still	Always 1: (2000, 500, 1700)
15	(2000, 500, 1700)	-	Freight	-	FR is running	Always 3: Freight
16	(2000, 500, 1700)	-	Freight	(9700, 4000)	FR is standing still	Always 4: (9700, 4000)
17	(2000, 500, 1700)	-	Freight	(9700, 4000)	FR is running	Always 3: Freight
18	(2000, 500, 1700)	(12500, 12700, 2800)	-	-		Always 1: (2000, 500, 1700)
19	(2000, 500, 1700)	(12500, 12700, 2800)	-	(9700, 4000)		If TS=IC then 1: (2000, 500, 1700) else 4: (9700, 4000)
20	(2000, 500, 1700)	(12500, 12700, 2800)	Freight	-	FR is standing still	Always 1: (2000, 500, 1700)
21	(2000, 500, 1700)	(12500, 12700, 2800)	Freight	-	FR is running	If TS=Freight then 3: Freight else 1: (2000, 500, 1700)
22	(2000, 500, 1700)	(12500, 12700, 2800)	Freight	(9700, 4000)	FR is standing still	Always 4: (9700, 4000)
23	(2000, 500, 1700)	(12500, 12700, 2800)	Freight	(9700, 4000)	FR is running	If TS=Freight then 3: Freight else 4: (9700, 4000)

Table 8.18: SMD table of Gouda station for the direction Gouda → Utrecht

8.6 Conclusions

In this chapter the SMD model, whose primal objective is to resolve conflicts in the timetable-free environment, has been applied to a current situation where timetables are a common practice. The goal is to examine whether a complex real-life situation can be modelled within the SMD setting and whether the model can compete with the conflict resolution rules, called TAD rules, which are used nowadays by ProRail. It has been shown how a real-life situation can be modelled with the SMD approach. We have explained the different modelling choices that have been made and how a large area can be divided into small manageable sub-areas. By means of a simulation, the SMD strategy has been compared to a number of heuristics and to the TAD strategy which is used nowadays by ProRail. While different scenarios yielded slightly different results, the overall conclusions were comparable. Therefore, it has been chosen to confine the presented results to one of the scenario's. In this scenario the SMD strategy has outperformed the TAD strategy and improved the punctuality of trains with 10 percent points for the Utrecht → Gouda direction and with 23 percent points for the Gouda → Utrecht direction. Of course, these percentages vary per scenario, but in all cases the SMD strategy has shown significantly superior results when compared to those of TAD rules. From the heuristics we have looked at, the majority performed poorly. Some however performed well in a number of cases. For instance, for the presented case, the FR-IC-RE heuristic has performed well for both directions and has actually outperformed the SMD strategy for the direction Gouda → Utrecht by one percent point, when considering the punctuality of trains at the Utrecht central station. The drawback of the heuristics is however that these are strongly dependent on the configuration of the line segment. For instance, a change in the number of the freight trains, that run through the segment, will affect the performance of such a heuristic, we have shown in Section 8.4.4 that the drop in performance can be considerable. On the other hand, the SMD model produces dynamic strategies which are optimised for various situations. We can conclude that the SMD model has shown very well results on line segment Utrecht - Gouda.

In practice the SMD approach can be used to construct the SMD tables which can be used by the train dispatches pretty much in the same manner as the TAD tables are used nowadays. Such a table lists intuitive rules that are simple to apply and are easy to interpret. Alternatively, the approach can be integrated into a Decision Support System which will detect conflicts and pop-up with a selection of the resolution rules which are preselected by the SMD system on the basis of their value. The train dispatcher can then select the most suitable resolution.