Downloaded from UvA-DARE, the institutional repository of the University of Amsterdam (UvA)
http://hdl.handle.net/11245/2.70051

File ID	uvapub:70051
Filename	Chapter 1: General introduction
Version	unknown

SOURCE (OR PART OF THE FOLLOWING SOURCE):

Type	PhD thesis
Title	Combinatorial RNAi against HIV-1
Author	Y.P. Liu
Faculty	AMC-UvA
Year	2009

FULL BIBLIOGRAPHIC DETAILS:
http://hdl.handle.net/11245/1.323233

Copyright

It is not permitted to download or to forward/distribute the text or part of it without the consent of the author(s) and/or copyright holder(s), other than for strictly personal, individual use.

UvA-DARE is a service provided by the library of the University of Amsterdam (http://dare.uva.nl)
(pagedate: 2014-08-18)

Chapter 1

General introduction

Human immunodeficiency virus type 1

The virus that causes the acquired immunodeficiency syndrome (AIDS) was first identified in 1983 and later named human immunodeficiency virus type 1 (HIV-1) (1-4). Over the past 25 years, almost 60 million individuals have been infected with HIV-1 and nearly 25 million have died of AIDS. In 2007, approximately 33 million individuals were infected with HIV-1 worldwide, 2.5 million became newly infected and 2.1 million deaths occurred due to AIDS. HIV-1/AIDS has become a major cause of death worldwide.

The most heavily affected countries are located in sub-Saharan Africa, where more than 68% of all HIV-1-infected individuals live and 76% of all AIDS-related deaths occurred in 2007 (http://www.unaids.org). In these countries, HIV-1 infection has reduced life expectancy by more than 20 years, slowed economic growth and deepened household poverty. This is mainly due to the limited access to the antiretroviral drugs. Initially, HIV-1 patients were treated with a single drug, but this resulted in the emergence of drug-resistant variants. When more drugs reached the clinic, patients could be treated with combination antiretroviral drug therapy (cART), which effectively suppresses HIV-1 replication and prevents the evolution of drug-resistant virus variants (5,6). However, cART is expensive, not curative and chronic usage is associated with a significant degree of toxicity for some patients (7,8). The emergence of drug-resistant HIV-1 strains has become a significant problem. Virus evolution is allowed by suboptimal adherence to the therapy and caused by the high replication rate and the error-prone replication machinery of HIV-1 (9,10). Thus, there is a need for novel therapeutic approaches against HIV-1. The recent discovery of the RNA interference (RNAi) mechanism provided a new strategy to potently inhibit HIV-1 in a sequence-specific manner (11). In this thesis, I will describe the development of alternative therapeutic strategies based on the RNAi mechanism to inhibit HIV-1 replication. This introduction will provide an overview of the basic features of the HIV-1 replication cycle and the cellular RNAi mechanism.

HIV-1 RNA, proteins and the virion particle

HIV-1 belongs to the *lentivirus* genus, a subfamily of the *Retroviridae* (12). Retroviruses characteristically carry two copies of the positive stranded RNA genome in each virion. Upon infection of a host cell, the RNA is copied by the viral reverse transcriptase (RT) enzyme into double-stranded DNA, which is subsequently transported to the nucleus and inserted into the cellular genome by the viral integrase enzyme. The integrated DNA state is called the provirus.

The HIV-1 genome (Fig. 1A) is 9.8 kb in length and encodes nine genes: gag, pol, vif, vpr, vpu, rev, tat, env and nef (13-15). The Gag, Pol and Env proteins are the three typical retroviral proteins. The gag gene encodes four structural proteins: the p24 capsid (CA), the p17 matrix (MA), the p7 nucleocapsid (NC) and the p6 protein (16-18). The pol gene encodes three enzymes: RT, integrase (IN) and protease (PR) that are all essential in the viral replication cycle (17-22).

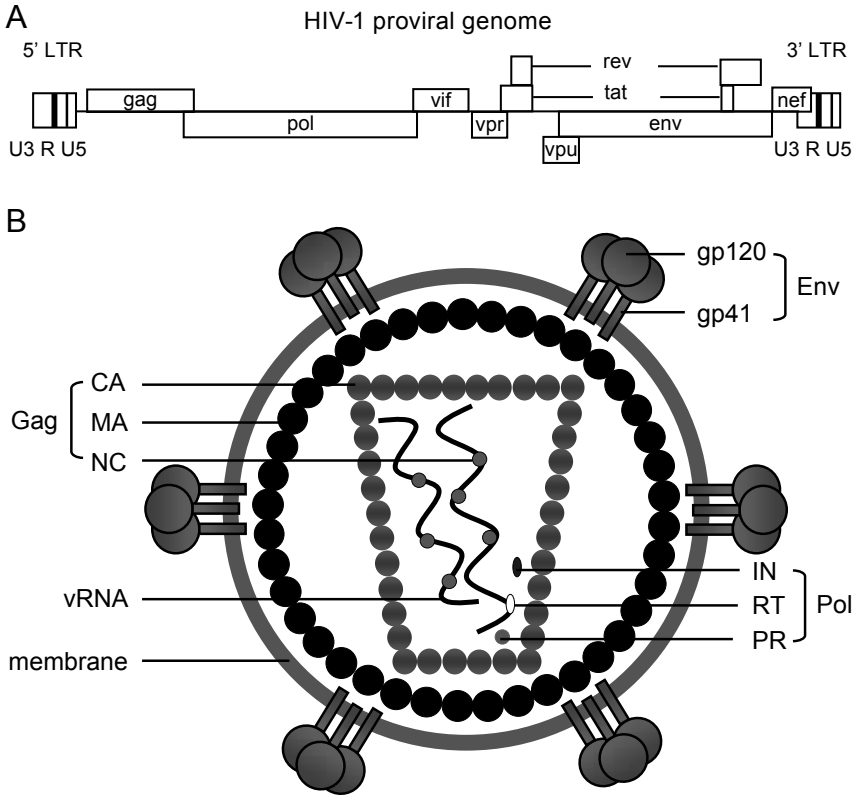

Figure 1. Organization of the HIV-1 proviral genome and viral particle. (**A**) The HIV-1 proviral genome encodes the viral proteins: Gag, Pol, Vif, Vpr, Vpu, Tat, Rev, Env and Nef. The LTRs contain regulatory DNA and RNA elements that are required for viral replication. The 5′ LTR (left) acts as a transcriptional promoter and the 3′ LTR (right) encodes a polyadenylation signal. (**B**) The structure of the HIV-1 particle. The virion is enveloped by a lipid bilayer that contains the Env protein, which consists of the gp41 and gp120 subunits. Gag-encoded MA proteins line the inside of the envelope and CA proteins form the cone-shaped virion capsid. NC protein is associated with the viral RNA genome (vRNA) that is present as a dimer in the capsid structure. The pol-encoded proteins IN, RT and PR are present in the virion capsid.

The env gene encodes for the viral envelope glycoprotein gp160 (Env), which upon cleavage provides the gp120 and gp41 subunits that remain associated to form the trimeric Envelope glycoprotein. The tat and rev genes encode the regulatory proteins Tat and Rev that are essential for viral replication. The Tat protein is a transcriptional activator that selectively activates HIV-1 transcription. The Rev protein is required for the nuclear export of unspliced and singly spliced HIV-1 transcripts (23-26). Furthermore, the HIV-1 genome encodes the four accessory proteins Vif, Vpr, Vpu and Nef. These proteins are not strictly

required for viral replication in many *in vitro* systems, but are important for viral replication, efficient virus spread and pathogenesis *in vivo* (27,28).

The HIV-1 protein-coding sequences are flanked on the proviral DNA by non-coding sequences that include the long terminal repeats (5′ and 3′ LTR), which consist of three domains designated U3 (unique at 3′ end of the RNA), R (repeat) and U5 (unique at 5′ end of the RNA) (Fig. 1A). These regions contain the transcriptional promoter and several structural/sequence motifs that are important for viral replication (29,30). Viral transcription starts at the first residue of R in the 5′ LTR and the transcript is polyadenylated at the last residue of R in the 3′ LTR.

In the mature virus particle (Fig. 1B), the CA proteins have assembled to form a cone-shaped core where the two genomic RNA molecules, coated with NC protein, and the viral enzymes PR, RT and IN reside. The MA proteins form a shell surrounding the inside of the viral membrane. The outer surface of the viral particle is composed of a lipid bilayer, which is derived from the host cell membrane during budding of the virus. Within this envelope-bilayer, gp41 is non-covalently bound to p17 protein on the inside and to the gp120 glycoprotein on the outside of the virus particle (31-35). The gp41-gp120 complex consists of a trimer of gp41-gp120 and determines the binding of HIV-1 to a specific receptor on the target cell to facilitate the infection process.

HIV-1 replication cycle

HIV-1 is transmitted through direct contact of a mucous membrane or the bloodstream with a bodily fluid containing HIV-1, such as blood, semen, vaginal fluid, preseminal fluid and breast milk (36). HIV-1 infects cells of the immune system that carry the appropriate receptors: CD4 and CXCR4 or CCR5 as co-receptor (Fig. 2). Cells that are susceptible to HIV-1 infection include CD4+ T cells, monocytes, macrophages, dendritic cells (DC), thymocytes and microglia (37-42). To enter a host cell, the virus attaches to the target cell via binding of its envelope gp120 protein to the CD4 receptor and a co-receptor. These interactions induce fusion of the viral and cellular membranes, resulting in the release of the viral core into the cytoplasm (Fig. 2). Within the viral core, the RNA genome is reverse transcribed into DNA. Subsequently, the core is translocated to the cell nucleus, where the viral DNA is integrated into the host genome by the IN enzyme. The proviral DNA serves as a template for the production of viral mRNAs and new progeny viral RNA genomes. Viral structural proteins and two RNA genome copies assemble into a virion particle, which is released from the cell by a budding process (43). After maturation, these virions can initiate new rounds of infection, but direct cell-to-cell spread of virions is also likely to occur (17,19,21).

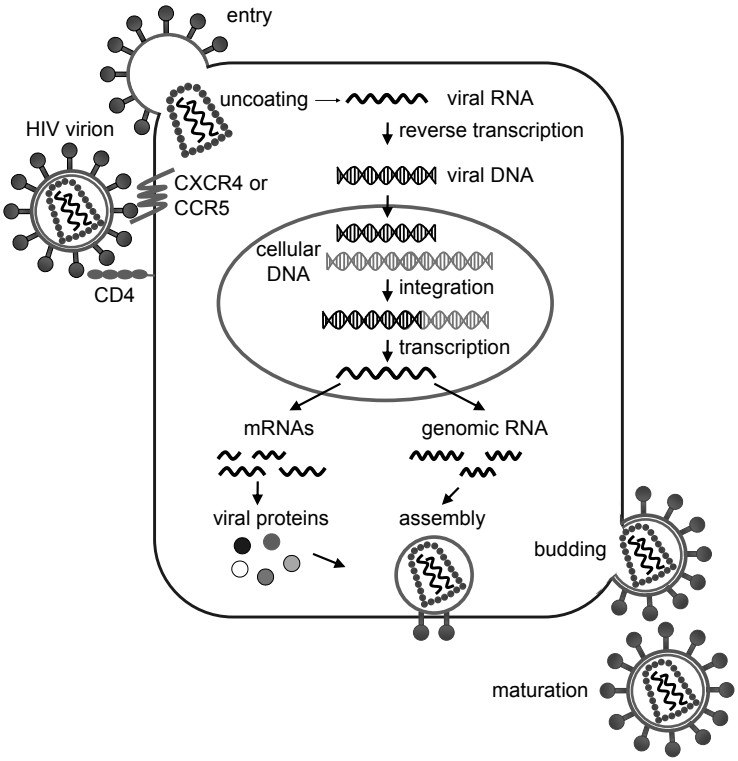

Figure 2. Schematic of the HIV-1 replication cycle. Important steps of the viral replication cycle includes: entry, reverse transcription of the viral RNA genome, integration of the viral DNA into the cellular chromosome, production of viral proteins and genomic RNAs, assembly and maturation of new virus particles.

HIV-1 disease course and antiretroviral therapy

HIV-1 infection is characterized by an acute and chronic phase. The acute infection may show flu-like symptoms and is characterized by a steady rise in viral load and a decline of CD4+ T cells in the peripheral blood (44). Subsequently, the immune system kicks in to suppress the viremia. The viral load reaches a steady state level termed the viral setpoint, which is a predictor of disease progression (45). The chronic phase can last from a few years (rapid progressors) to more than 12 years (long term non-progressors). There is a gradual increase in the viral load and a concomitant decrease in the number of CD4+ T cells. When CD4+ T cell counts decline below a critical level, the patient is at risk of developing disease. AIDS patients are immunocompromised to such an extent that they become susceptible to opportunistic infections and various forms of cancer, which is often the cause of death (46,47).

HIV-1 replication can be suppressed by a variety of antiretroviral drugs that target distinct steps in the replication cycle (48). The first antiretroviral drug used to treat HIV-1 was the nucleoside RT inhibitor AZT (ziduvidine), which acts as chain-terminator during reverse transcription, thereby preventing the virus from copying its RNA genome into DNA. Non-nucleoside reverse transcriptase inhibitors inhibit HIV-1 replication by binding to the RT enzyme and blocking its function. It became apparent that the use of a single antiretroviral drug is not sufficient to durably inhibit HIV-1 due to the emergence of drug-resistant virus variants, which is caused by the high replication rate and the error-prone replication machinery of HIV-1. The introduction of the new class of protease inhibitors (PI) made it possible to combine drugs as in cART. PI inhibit the viral protease enzyme, thereby suppressing the formation of mature infectious virus particles. New classes of inhibitors include the entry inhibitors that interfere with binding and/or fusion of HIV-1 with the host cell. Integrase inhibitors suppress the IN enzyme, thereby preventing insertion of the viral DNA genome into the DNA of the infected cells.

Combinations of antiretroviral drugs are currently used to keep HIV-1 replication under control and to successfully treat HIV-1 infected patients. However, a growing problem is the emergence and spread of drug-resistant HIV strains (49). Moreover, drug compliance is challenging due to several side effects of the antiretroviral drugs, which range from nausea, fatigue and diarrhea to organ failure (50). Therefore, alternative therapeutic approaches against HIV-1 need to be explored. An attractive and innovative approach is the use of gene therapy to deliver antiviral genes that interfere with viral replication to cells that can be infected by HIV-1 (51-54). Such a durable gene therapy approach has the potential advantage that the patient will not require daily medication such that the quality of life will be significantly improved. Furthermore, these genetic antivirals are produced only in the treated cells, which may have the benefit of reduced toxicity compared to the systemic application of antiretroviral drugs. The recent discovery of the RNAi mechanism (55) offers an attractive tool to potently inhibit HIV-1 replication in a sequence-specific manner (11).

RNA interference (RNAi)

RNAi is an evolutionarily conserved posttranscriptional gene silencing mechanism in eukaryotes that is triggered by double stranded RNA (dsRNA) (Fig. 3). The first observation of gene silencing was made in petunias, where introduction of a pigment-producing gene did not result in the expected deepened color of the flower, but instead the complete loss of color in some plants, whereas others showed white patches (56,57). This phenomenon was called co-suppression since the expression of both the transgene and the related endogenous pigmentation genes were silenced. Co-suppression is initiated by dsRNA that is formed by annealing of complementary sequences of the transgene and the endogenous gene. The same effect was observed when researchers infected plants with the potato virus X, a phenomenon that is called

virus-induced gene silencing (VIGS) (58). VIGS is induced by dsRNA molecules that are produced during viral replication (59). In plants, these silencing phenomena are caused by two mechanisms: posttranscriptional gene silencing (PTGS) and transcriptional gene silencing (TGS). Both pathways are initiated when dsRNA is processed into small RNA duplexes of 21-26 nucleotides (nt) in length. PTGS causes degradation of the complementary mRNA in the cytoplasm, whereas TGS affects transcription by introducing epigenetic alterations in the complementary DNA sequence (60). Similar phenomena were observed in fungi and called "quelling" (61). A few years later, RNAi was discovered in the nematode Caenorhabditis elegans when the introduction of dsRNA complementary to an endogenous mRNA transcript resulted in specific silencing of that gene (55). Soon it became apparent that RNAi is not restricted to plants and worms, but that the mechanism is conserved in fungi, protozoa, fruitflies and vertebrates (62-67).

The key players in the RNAi mechanism are small noncoding dsRNAs of 21 to 30 nt in length. According to their origin, function and co-factors, four types of small noncoding RNAs have been described: small interfering RNAs (siRNAs), microRNAs (miRNAs), repeat-associated siRNAs (rasiRNAs) and Piwi interacting RNAs (piRNAs). In the context of this thesis, understanding of the functions of siRNAs and miRNAs is essential, which will therefore be discussed in further detail below.

Small interfering RNAs (siRNAs)

Typical siRNA molecules have been detected in protozoa, fungi, worms, fruitflies and plants. These siRNAs are derived from long dsRNA molecules that originate from different sources: a viral infection, inverted-repeat containing transgenes, aberrant transcription products or experimentally introduced complementary transcripts (Fig. 3). These dsRNA precursors are processed by the cytoplasmic Dicer/TRBP/PACT endonuclease complex to 21 to 24 nt siRNAs with 3′ overhangs of 2 nt (68-71). The siRNA duplex is incorporated into the RNA-induced silencing complex (RISC), which is a multicomponent nuclease. The passenger strand of the siRNA is cleaved, released from the complex and subsequently degraded (72-74), whereas the guide strand of the siRNA instructs RISC to cleave a complementary mRNA target at position 10 or 11 within the base paired duplex (75). In case of histone modification of chromosomes, the siRNA remains in the nucleus and is incorporated into the RNA-induced initiation of transcriptional silencing complex (RITS) to induce transcriptional silencing (76,77).

MicroRNAs (miRNAs)

MiRNAs comprise a large conserved class of noncoding RNAs that regulate cellular gene expression at the posttranscriptional level in eukaryotes (78,79). So far, over 600 human miRNAs have been identified that are expected to regulate over 30% of human genes (80,81). The miRNAs are synthesized as

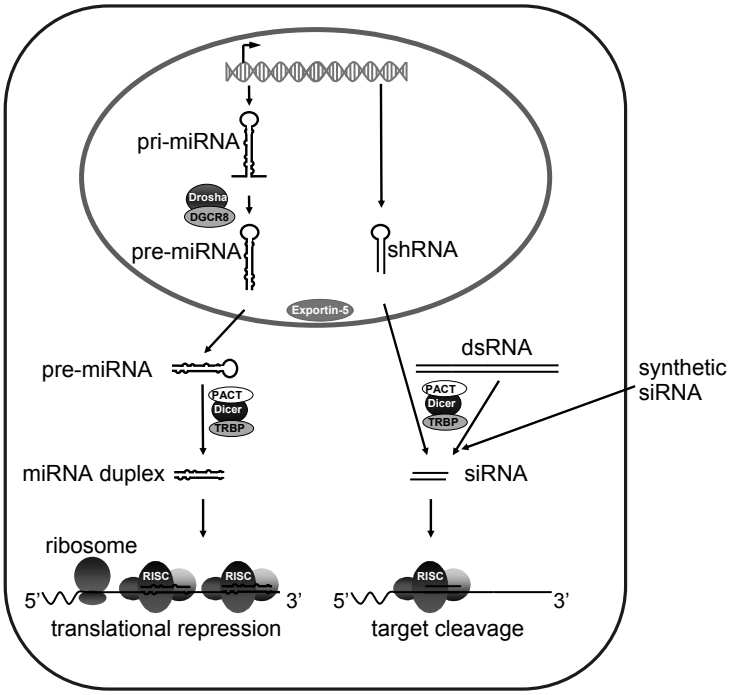

Figure 3. Schematic of the RNAi pathway. The microRNA (miRNA) and small interfering RNA (siRNA) pathway are shown. MiRNAs are encoded in the genome and are transcribed to yield a pri-miRNA, which is cleaved by Drosha/DGCR into a pre-miRNA. The pre-miRNA is exported by Exportin-5 to the cytoplasm and further processed by the Dicer/TRBP/PACT complex into miRNA duplexes. The mature miRNA strand guides RISC to either translationally repress or to cleave the mRNA target. The RNAi pathway can also be induced by the expression of shRNA constructs or synthetic siRNAs. DsRNA precursors are processed by the Dicer/TRBP/PACT complex into siRNA duplexes. The guide strand of the siRNA duplex directs RISC to cleave complementary mRNAs.

primary miRNAs (pri-miRNAs) that fold a characteristic hairpin structure, which is cleaved by the nuclear RNase III-like endonuclease Drosha in complex with its cofactor DGCR8 into a precursor miRNA (pre-miRNA) of ~70 nt (82) (Fig. 3). These pri-miRNAs are sometimes expressed in clusters as a polycistron. The pre-miRNA is transported to the cytoplasm by Exportin-5 and further processed by the Dicer/TRBP/PACT endonuclease complex into an imperfect ~22 nt miRNA duplex (83-85). The single stranded mature miRNA is used by miRISC (miRNA-associated RISC) to bind mRNA targets, which are usually located in the 3′ UTR (86,87). Depending on the extent of base pairing of the two molecules, the mRNA can be silenced by cleavage or translationally repressed. Plant miRNAs generally trigger target mRNA degradation by base pairing with near-perfect complementary mRNA targets (88,89). In animals, most miRNAs translationally repress their mRNA targets by imperfect base

pairing to multiple sites in the 3′ UTR with the "seed region", the first 2-8 nt from the 5′ end of the miRNA (90,91). However, animal miRNAs can also induce mRNA degradation of targets by near-perfect base pairing (92).

Biological function of RNAi

RNAi plays an important role in defending the genomes of plants, insects, fungi and nematodes against transgenes, transposons and foreign nucleic acids encoded by viruses. RNAi is induced by siRNAs that are processed from dsRNA viral replication intermediates and duplexes formed by complementary transcripts (93-97). In plants, the RNAi machinery serves as an adaptive, antiviral defense system, which is transmitted systemically to other parts of the plant in response to viral infection (94,98). Many plant viruses have evolved RNAi suppressors to counteract this RNAi inhibition (99).

In mammalian cells, siRNAs have not been detected until the recent discovery of siRNAs against the long interspersed nuclear element (L1) retrotransposon in cultured human cells (100). Furthermore, siRNAs have been detected for a subset of pseudogenes in mouse oocytes (101,102). Accumulating evidence suggests that RNAi also plays a role as antiviral defense mechanism in mammalian cells. In contrast to plants, virus-specific siRNAs have only been detected thus far in HIV-1 infected cells (103). However, it is clear that mammalian viruses closely interact with the host miRNA pathway. Several studies suggest that virus infection in mammalian cells can be influenced or counteracted by cellular miRNAs (104,105). Recently, evidence emerged showing that several cellular miRNAs are involved in the suppression of HIV-1 mRNAs in resting CD4+ T cells, which suggests that miRNAs play a role in the establishment of viral latency (106). Like plant viruses, mammalian viruses also encode viral factors with RNAi suppression activity (103,104,107-112), suggesting that RNAi may also have an antiviral function in animals.

Strategies for inducing RNAi

The efficiency and sequence-specificity of the RNAi mechanism makes it highly attractive as an approach to knock down the expression of disease-associated genes or mRNAs encoded by pathogenic viruses (113-115). In mammalian cells, the cellular RNAi pathway can be triggered by transfection of synthetic siRNAs of 21-23 bp with 2-nt 3′ overhangs, modeled after the natural Dicer cleavage products (116,117) (Fig. 3). Unlike dsRNA larger than 30 bp, siRNAs do not trigger the interferon (IFN) pathway that induces non-specific degradation of mRNAs (118,119). Although RNAi can be a very potent mechanism, RNAi induced by synthetic siRNAs is transient in nature and resumed expression of the target mRNA is usually observed after a few days in mammalian cell culture systems (120,121).

Stable gene silencing became possible by the development of gene constructs that express a short hairpin RNA (shRNA) in the cell. These ~19-29 bp shRNAs

are modeled after pre-miRNAs with a base paired stem, a small loop and a 3′-terminal UU overhang (122-124) (Fig. 3). Expression of shRNA constructs is mostly driven by RNA polymerase III promoters, including the U6 and H1 promoter and several promoters of tRNA genes because of their natural function in the production of small cellular transcripts (122,124,125). Other advantages of RNA polymerase III transcription include the high shRNA expression level and the use of precise initiation and termination sites, the latter consisting of 4-6 consecutive U residues in the nascent transcript. The shRNAs have recently been optimized by inclusion of RNA structural motifs from pri-miRNAs (126). These artificial miRNAs were reported to be more efficient than the simple shRNA design in inducing RNAi-mediated silencing (127,128). The hairpin RNAs can be designed to encode siRNAs/miRNAs that are fully complementary to a specific mRNA, resulting in cleavage of the target transcript. Unlike shRNAs, miRNA mimics are usually expressed from an RNA polymerase II promoter, which is the natural promoter of most miRNA genes (129). However, some miRNAs are transcribed from an RNA polymerase III promoter (130). Advantages of the RNA polymerase II system include the availability of tissue-specific and inducible promoters, which allow regulated expression of the miRNA inhibitor. This may be particularly important to avoid toxicity, since high shRNA expression from the U6 promoter has been shown to cause fatality in mice due to saturation of the RNAi pathway (131). Furthermore, smaller dsRNA duplexes can in fact also activate the IFN pathway (132,133), which is dose- and sequence-dependent. These findings emphasize the need to use minimally required amounts of shRNA inhibitors. Another important advantage of RNA polymerase II promoters is their ability to transcribe extended transcripts, which makes them very suitable for certain combinatorial RNAi approaches.

RNAi gene therapy for HIV-1/AIDS

The development of vector based RNAi inducers for stable gene knockdown enabled the design of a durable gene therapy against HIV-1. This approach allows the stable expression of antiviral siRNAs in cells that are targeted by HIV-1, hopefully such that the patient would no longer require daily medication. For gene delivery, recombinant viral vectors based on viruses are often used. These vectors have a broad tropism and could be used to deliver the vector genome and its therapeutic cargo to the target cells. Lentiviral vectors are emerging as one of the best candidates currently available for delivery and stable expression of shRNAs. Lentiviral vectors have been constructed based on the HIV-1 genome and are capable of transducing many cell types, including hematopoietic stem cells and nondividing cells (134,135). The transgene encoded by the lentiviral vector becomes stably integrated into the host cell genome (136). Unlike retroviruses, lentiviruses tend not to integrate in close proximity to active promoters, but often within introns of an active transcriptional unit, thereby limiting their potential to induce oncogenesis by disregulation of the expression of a proto-oncogene (137).

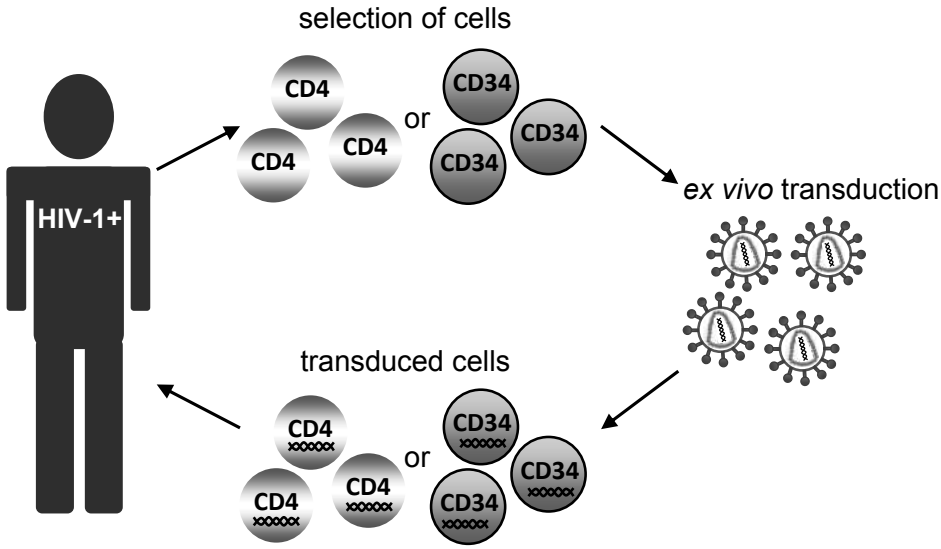

Figure 4. Gene therapy for HIV-1 infected patients. Blood from the patient is taken to isolate CD4+ or CD34+ cells. These cells are transduced *ex vivo* with lentiviral vectors carrying anti-HIV genes and re-infused into the patient.

For a gene therapy against HIV-1, there are two treatment options to deliver antiviral genes to the HIV-susceptible cells (Fig. 4). The first option is to withdraw blood from the infected patient and to isolate the CD4+ T cells, followed by *ex vivo* transduction with lentiviral vectors expressing the antiviral RNAi inducer against HIV-1. Subsequently, the transduced cells are expanded and re-infused back into the patient, where they will resist HIV-1 infection and hopefully prevent the gradual collapse of the immune system. However, like normal T cells, the transduced T cells will have a limited life span and thus periodic infusions will be required. Another, perhaps more durable treatment option is to transduce CD34+ hematopoietic stem cells, which are the precursors of all myeloid and lymphoid lineages. Engraftment of autologous transduced CD34+ cells will result in a steady production of HIV-1 resistant T cells.

Escape from RNAi

Since the discovery of RNAi, researchers have made use of the RNAi pathway as a tool to knock down mRNAs encoded by pathogenic viruses (113-115). Initial experiments showed that HIV-1 replication can be potently inhibited by transient transfection of siRNAs targeting either viral RNA sequences or host genes that are essential for HIV-1 entry or replication (11,138-141). The use of durable shRNA expression systems is preferred for HIV-AIDS therapy because this virus causes a chronic infection (142,143). Although potent knockdown can be obtained, the therapeutic use of a single shRNA is limited in time

because of the rapid emergence of HIV-1 escape mutants that contain nucleotide substitutions or deletions in the siRNA target sequence (142-144). In addition, HIV-1 can also escape from RNAi-mediated inhibition through mutations that alter the target RNA secondary structure of the target sequence, which affects its accessibility of the mRNA target for binding of RISC (144). The same phenomenon was described for hepatitis C virus (HCV), where subtle changes in the HCV genome were sufficient to permit viral escape from siRNA-mediated inhibition (145). It has recently been suggested that HIV-1 can also select compensatory mutations outside the target region to upregulate viral transcription when RNAi pressure is exerted on the conserved viral trans-activation response (TAR) hairpin (146), which has an indispensable role in viral transcription. However, this viral escape route may well represent the general optimization of an attenuated HIV-1 strain that was used in these studies (147,148). Regarding the high genetic diversity of HIV-1, the prevention of viral escape remains a major challenge.

Targets for anti-HIV-1 RNAi strategies

To attack viral RNA sequences with RNAi in HIV-infected cells, it seems attractive to target the "incoming" RNA genome of infecting virion particles or subsequently the newly synthesized viral transcripts. Several studies showed that the HIV-1 incoming RNA genome is indeed a target for RNAi (11,138,149-151), but other studies provided strong evidence against this possibility (152-155). It is likely that the incoming HIV-1 RNA genome is a difficult target for RNAi because the core particles render the viral genomic RNA inaccessible to the RNAi machinery (153,155). Thus, it seems impossible to prevent the establishment of an integrated DNA provirus. The alternative is to use RNAi against the newly synthesized viral transcripts in the cytoplasm, thus reducing virus production. It seems beneficial to target viral sequences that are present in both spliced and unspliced HIV-1 transcripts. Furthermore, it is important to attack mRNAs that encode essential viral proteins and the nucleotide sequence of the target should ideally be well conserved among different virus strains. Targeting sequences that encode essential viral proteins will not allow deletion-based escape routes. Nevertheless, HIV-1 can also escape from RNAi-mediated inhibition by selecting a point mutation in the target sequence (142-144). Another anti-escape strategy is to specifically target the evolved RNAi-escape mutants with second generation shRNA inhibitors (156).

Scope of this thesis

To prevent viral escape, HIV-1 should be targeted simultaneously with multiple highly efficient siRNAs in a combinatorial RNAi approach, which will increase the genetic barrier for viral escape (157,158). This RNAi strategy is comparable to the current cART treatment, which uses a combination of at least 3 antiretroviral drugs. Estimates based on the evolution of HIV-1 strains that are resistant to antiretroviral drugs (157) and a stochastic computational model

predict that the simultaneous expression of 4 anti-HIV shRNAs may suffice to prevent viral escape (159). There are several ways to express multiple effective siRNAs. One possibility is the insertion of multiple shRNA-expression cassettes in a viral vector (160). Ideally, the expression of multiple antiviral shRNAs should be coordinated by putting them in a single transcript.

In this thesis, we describe the development of novel combinatorial RNAi gene therapy approaches against HIV-1 by expressing multiple antiviral siRNAs from a single transcript. To obtain combinatorial RNAi attack against HIV-1, we first designed extended short hairpin RNAs (e-shRNAs) that consist of multiple active shRNA-units that are stacked on top of each other (**Chapter 2**). To explore some building principles for these molecules, we first generated e-shRNAs that encode 2 active siRNAs (e2-shRNA). The antiviral e2-shRNAs were examined for their silencing activities on luciferase reporters and HIV-1 gene expression.

Based on the insight obtained by e2-shRNA optimization, we designed antiviral e-shRNAs that encode 3 or even 4 siRNAs (**Chapter 3**). The ability of these constructs to inhibit luciferase reporter constructs and HIV-1 production was tested. Furthermore, we analyzed whether these hairpins are processed properly by the RNAi machinery into functional siRNAs. These studies underscore that there is an optimum length of the e-shRNA design, after which the RNAi activity drops quickly. The best inhibitor was selected for insertion in a lentiviral vector that was used to produce stably transduced cells, which were challenged by HIV-1.

In **chapter 4**, we designed anti-HIV-1 constructs that express multiple siRNAs from a single transcript based on a cellular miRNA polycistron. We designed the hairpin RNAs to exhibit structural features (mismatches, bulges and thermodynamic stability) that mimic as much as possible the natural miRNA polycistron. First, individual miRNA constructs were generated and tested for their ability to knock down luciferase reporter constructs and HIV-1 production. Subsequently, we combined the anti-HIV miRNAs in a single transcript and tested the ability of this polycistronic miRNA construct to inhibit HIV-1 replication.

We next assessed the ability of antiviral miRNAs and shRNAs to inhibit partially complementary HIV-1 mRNA targets (**Chapter 5**). The rationale behind this study is to analyze whether targeting of multiple complementary targets could provide an alternative RNAi approach for robust and sustained suppression of escape-prone viruses. We tested the knockdown efficiency of miRNAs and shRNAs against wild-type and RNAi-escape HIV-1 variants with one or two mutations in the target sequence. Furthermore, we investigated whether miRNA or shRNA mediated silencing would be differently affected when the target sequence is situated within the open reading frame (ORF) or the 3′ UTR of the mRNA.

In **chapter 6**, we report that the titer of lentiviral vectors encoding anti-HIV-1 shRNAs or miRNAs can be dramatically reduced compared to the control vector. We demonstrate that different mechanisms are responsible for this miRNA and shRNA effect. Consequently, distinct strategies were required for restoration of the vector titer.

In **chapter 7**, we review the recent progress of RNAi-based approaches against HIV-1 using lentiviral vectors as a delivery system. Furthermore, we discuss its potential for a clinical gene therapy application.

In **chapter 8**, we discuss future directions of combinatorial RNAi strategies and the potential for clinical applications against cancer and viral infections.

References

1. Barré-Sinoussi,F., Chermann,J.C., Rey,P., Nugeyre,M.T., Chamaret,S., Gruest,J., Dauguet,C., Axler-Blin,C., Vezinet-Brun,F., Rouzioux,C. et al. (1983) Isolation of a T-lymphotropic retrovirus from a patient at risk for acquired immune deficiency syndrome (AIDS). Science, 220, 868-871.
2. Gallo,R.C., Sarin,P.S., Gelmann,E.P., Robert-Guroff,M., Richardson,E., Kalyanaraman,V.S., Mann,D., Sidhu,G.D., Stahl,R.E., Zolla-Pazner,S. et al. (1983) Isolation of human T-cell leukemia virus in acquired immune deficiency syndrome (AIDS). Science, 220, 865-867.
3. Coffin,J., Haase,A., Levy,J.A., Montagnier,L., Oroszlan,S., Teich,N., Temin,H., Toyoshima,K., Varmus,H., Vogt,P. et al. (1986) What to call the AIDS virus? Nature, 321, 10.
4. Coffin,J., Haase,A., Levy,J.A., Montagnier,L., Oroszlan,S., Teich,N., Temin,H., Toyoshima,K., Varmus,H., Vogt,P. et al. (1986) Human immunodeficiency viruses. Science, 232, 697.
5. Bartlett,J.A., Fath,M.J., DeMasi,R., Hermes,A., Quinn,J., Mondou,E. and Rousseau,F. (2006) An updated systematic overview of triple combination therapy in antiretroviral-naive HIV-infected adults. AIDS, 20, 2051-2064.
6. Deeks,S.G. (2006) Antiretroviral treatment of HIV infected adults. BMJ, 332, 1489.
7. Schackman,B.R., Gebo,K.A., Walensky,R.P., Losina,E., Muccio,T., Sax,P.E., Weinstein,M.C., Seage,G.R., III, Moore,R.D. and Freedberg,K.A. (2006) The lifetime cost of current human immunodeficiency virus care in the United States. Med Care, 44, 990-997.
8. Carr,A. and Cooper,D.A. (2000) Adverse effects of antiretroviral therapy. Lancet, 356, 1423-1430.
9. Little,S.J., Holte,S., Routy,J.P., Daar,E.S., Markowitz,M., Collier,A.C., Koup,R.A., Mellors,J.W., Connick,E., Conway,B. et al. (2002) Antiretroviral-drug resistance among patients recently infected with HIV. N.Engl.J.Med., 347, 385-394.
10. Lafeuillade,A., Khiri,H., Chadapaud,S., Hittinger,G. and Halfon,P. (2001) Persistence of HIV-1 resistance in lymph node mononuclear cell RNA despite effective HAART. AIDS, 15, 1965-1969.
11. Jacque,J.M., Triques,K. and Stevenson,M. (2002) Modulation of HIV-1 replication by RNA interference. Nature, 418, 435-438.
12. Gonda,M.A., Wong-Staal,F., Gallo,R.C., Clements,J.E., Narayan,O. and Gilden,R.V. (1985) Sequence homology and morphologic similarity of HTLV-III and visna virus, a pathogenic lentivirus. Science, 227, 173-177.
13. Wain-Hobson,S., Sonigo,P., Danos,O., Cole,S. and Alizon,M. (1985) Nucleotide sequence of the AIDS virus, LAV. Cell, 40, 9-17.
14. Ratner,L., Haseltine,W., Patarca,R., Livak,K.J., Starcich,B., Josephs,S.F., Doran,E.R., Rafalski,J.A., Whitehorn,E.A., Baumeister,K. et al. (1985) Complete nucleotide sequence of the AIDS virus, HTLV-III. Nature, 313, 277-284.
15. Sanchez-Pescador,R., Power,M.D., Barr,P.J., Steimer,K.S., Stempien,M.M., Brown-Shimer,S.L., Gee,W.W., Renard,A., Randolph,A., Levy,J.A. et al. (1985) Nucleotide sequence and expression

of an AIDS-associated retrovirus (ARV-2). Science, 227, 484-492.

16. Coffin,J.M. (1996) In Knipe,D.M., Roizman,B., Howley,P.M., Monath,T.P., Straus,S.E., Chanock,R.M., Melnick,J.L. and Fields,B.N. (eds.), Fields Virology. Lippincott Williams & Wilkins, Philadelphia, pp. 1767-1847.
17. Luciw,P. (1996) In Fields,B.N., Knipe,D.M. and Howley,P.M. (eds.), Virology. Lippincott-Raven Publishers, Philadelphia, New York, Vol. 2.
18. Swanstrom,R. and Wills,J.W. (1997) In Coffin,J.M., Hughes,S.H. and Varmus,H.E. (eds.), Retroviruses. Cold Spring Harbor Laboratory press, Plainview, New York, pp. 263-334.
19. Vogt,V.M. (1997) In Coffin,J.M., Hughes,S.H. and Varmus,H.E. (eds.), Retroviruses. Cold Spring Harbor Laboratory Press, New York, pp. 27-69.
20. Brown,P.O. (1990) Integration of retroviral DNA. Curr.Top.Microbiol.Immunol., 157, 19-48.
21. Coffin,J.M. (1990) In Fields,B.N. and Knipe,D.M. (eds.), Virology. Raven Press, New York, N.Y., pp. 1437-1500.
22. Telesnitsky,A. and Goff,S.P. (1997) In Coffin,J.M., Hughes,S.H. and Varmus,H.E. (eds.), Retroviruses. Cold Spring Harbor Laboratory Press, Cold Spring Harbor, pp. 121-160.
23. Jeang,K.T., Chang,Y., Berkhout,B., Hammarskjold,M.L. and Rekosh,D. (1991) Regulation of HIV expression: mechanisms of action of Tat and Rev. [Review]. AIDS, 5, Suppl 2:S3-14.
24. Gait,M.J. and Karn,J. (1993) RNA recognition by the human immunodeficiency virus Tat and Rev proteins. Trends Biochem Sci, 18, 255-259.
25. Kjems,J. and Askjaer,P. (2000) Rev protein and its cellular partners. Adv.Pharmacol., 48, 251-298.
26. Hope,T.J. (1999) The ins and outs of HIV Rev. Arch.Biochem Biophys., 365, 186-191.
27. Anderson,J.L. and Hope,T.J. (2004) HIV accessory proteins and surviving the host cell. Curr. HIV/AIDS Rep., 1, 47-53.
28. Emerman,M. and Malim,M.H. (1998) HIV-1 regulatory/accessory genes: keys to unraveling viral and host cell biology. Science, 280, 1880-1884.
29. Berkhout,B. (1996) Structure and function of the human immunodeficiency virus leader RNA. Prog.Nucleic Acid Res.Mol.Biol., 54, 1-34.
30. Garcia,J.A. and Gaynor,R.B. (1994) The human immunodeficiency virus type-1 long terminal repeat and its role in gene expression. [Review]. Prog.Nucleic Acid.Res.Mol.Biol., 49, 157-196.
31. Veronese,F.D., DeVico,A.L., Copeland,T.D., Oroszlan,S., Gallo,R.C. and Sarngadharan,M.G. (1985) Characterization of gp41 as the transmembrane protein coded by the HTLV-III/LAV envelope gene. Science, 229, 1402-1405.
32. Gelderblom,H.R., Hausmann,E.H., Ozel,M., Pauli,G. and Koch,M.A. (1987) Fine structure of human immunodeficiency virus (HIV) and immunolocalization of structural proteins. Virol., 156, 171-176.
33. Poignard,P., Saphire,E.O., Parren,P.W. and Burton,D.R. (2001) gp120: Biologic aspects of structural features. Annu.Rev.Immunol., 19, 253-274.
34. Wyatt,R. and Sodroski,J. (1998) The HIV-1 envelope glycoproteins: fusogens, antigens, and immunogens. Science, 280, 1884-1888.
35. Brown,P.O. (1997) In Coffin,J.M., Hughes,S.H. and Varmus,H.E. (eds.), Retroviruses. Cold Spring Harbor Laboratory Press, New York, pp. 161-204.
36. van der,G.M. and Diepersloot,R.J. (1986) Transmission of human immunodeficiency virus (HIV/HTLV-III/LAV): a review. Infect., 14, 203-211.
37. Funke,I., Hahn,A., Rieber,E.P., Weiss,E. and Riethmuller,G. (1987) The cellular receptor (CD4) of the human immunodeficiency virus is expressed on neurons and glial cells in human brain. J Exp Med, 165, 1230-1235.
38. He,J., Chen,Y., Farzan,M., Choe,H., Ohagen,A., Gartner,S., Busciglio,J., Yang,X., Hofmann,W., Newman,W. et al. (1997) CCR3 and CCR5 are co-receptors for HIV-1 infection of microglia. Nature, 385, 645-649.
39. Ostrowski,M.A., Justement,S.J., Catanzaro,A., Hallahan,C.A., Ehler,L.A., Mizell,S.B.,

Kumar,P.N., Mican,J.A., Chun,T.W. and Fauci,A.S. (1998) Expression of chemokine receptors CXCR4 and CCR5 in HIV-1-infected and uninfected individuals. J Immunol, 161, 3195-3201.

40. Rubbert,A., Combadiere,C., Ostrowski,M., Arthos,J., Dybul,M., Machado,E., Cohn,M.A., Hoxie,J.A., Murphy,P.M., Fauci,A.S. et al. (1998) Dendritic cells express multiple chemokine receptors used as coreceptors for HIV entry. J Immunol, 160, 3933-3941.
41. Ruiz,M.E., Cicala,C., Arthos,J., Kinter,A., Catanzaro,A.T., Adelsberger,J., Holmes,K.L., Cohen,O.J. and Fauci,A.S. (1998) Peripheral blood-derived CD34+ progenitor cells: CXC chemokine receptor 4 and CC chemokine receptor 5 expression and infection by HIV. J Immunol, 161, 4169-4176.
42. Zaitseva,A. and et al (1997) Expression and function of CCR5 and CXCR4 on human Langerhans cells and macrophages: implications for HIV primary infection. Nature Medicine, 3, 1369-1375.
43. Freed,E.O. (2001) HIV-1 replication. Somat.Cell Mol Genet., 26, 13-33.
44. Clark,S.J. and Shaw,G.M. (1993) The acute retroviral syndrome and the pathogenesis of HIV-1 infection. Semin.Immunol, 5, 149-155.
45. Mellors,J.W., Rinaldo,C.R., Jr., Gupta,P., White,R.M., Todd,J.A. and Kingsley,L.A. (1996) Prognosis in HIV-1 infection predicted by the quantity of virus in plasma. Science, 272, 1167-1170.
46. de Repentigny,L., Lewandowski,D. and Jolicoeur,P. (2004) Immunopathogenesis of oropharyngeal candidiasis in human immunodeficiency virus infection. Clin.Microbiol.Rev., 17, 729-59, table.
47. Boshoff,C. and Weiss,R. (2002) AIDS-related malignancies. Nat.Rev.Cancer, 2, 373-382.
48. Pomerantz,R.J. and Horn,D.L. (2003) Twenty years of therapy for HIV-1 infection. Nat.Med, 9, 867-873.
49. Clavel,F. and Hance,A.J. (2004) HIV drug resistance. N Engl J Med, 350, 1023-1035.
50. Carr,A. (2003) Toxicity of antiretroviral therapy and implications for drug development. Nat. Rev.Drug Discov., 2, 624-634.
51. Strayer,D.S., Akkina,R., Bunnell,B.A., Dropulic,B., Planelles,V., Pomerantz,R.J., Rossi,J.J. and Zaia,J.A. (2005) Current status of gene therapy strategies to treat HIV/AIDS. Mol.Ther., 11, 823-842.
52. Wolkowicz,R. and Nolan,G.P. (2005) Gene therapy progress and prospects: novel gene therapy approaches for AIDS. Gene Ther., 12, 467-476.
53. Morgan,R.A., Walker,R., Carter,C.S., Natarajan,V., Tavel,J.A., Bechtel,C., Herpin,B., Muul,L., Zheng,Z., Jagannatha,S. et al. (2005) Preferential survival of CD4+ T lymphocytes engineered with anti-human immunodeficiency virus (HIV) genes in HIV-infected individuals. Hum.Gene Ther., 16, 1065-1074.
54. Mitsuyasu,R.T., Merigan,T.C., Carr,A., Zack,J.A., Winters,M.A., Workman,C., Bloch,M., Lalezari,J., Becker,S., Thornton,L. et al. (2009) Phase 2 gene therapy trial of an anti-HIV ribozyme in autologous CD34(+) cells. Nat.Med, 15, 285-292.
55. Fire,A., Xu,S., Montgomery,M.K., Kostas,S.A., Driver,S.E. and Mello,C.C. (1998) Potent and specific genetic interference by double-stranded RNA in Caenorhabditis elegans. Nature, 391, 806-811.
56. Napoli,C., Lemieux,C. and Jorgensen,R. (1990) Introduction of a chimeric chalcone synthase gene into petunia results in reversible co-suppression of homologous genes in trans. Plant Cell, 2, 279-289.
57. van der Krol,A.R., Mur,L.A., Beld,M., Mol,J.N. and Stuitje,A.R. (1990) Flavonoid genes in petunia: addition of a limited number of gene copies may lead to a suppression of gene expression. Plant Cell, 2, 291-299.
58. Ruiz,M.T., Voinnet,O. and Baulcombe,D.C. (1998) Initiation and maintenance of virus-induced gene silencing. Plant Cell, 10, 937-946.
59. Angell,S.M. and Baulcombe,D.C. (1997) Consistent gene silencing in transgenic plants expressing a replicating potato virus X RNA. EMBO J, 16, 3675-3684.
60. Matzke,M.A. and Birchler,J.A. (2005) RNAi-mediated pathways in the nucleus. Nat.Rev.Genet.,

6, 24-35.

61. Romano,N. and Macino,G. (1992) Quelling: transient inactivation of gene expression in Neurospora crassa by transformation with homologous sequences. Mol.Microbiol., 6, 3343-3353.
62. Grishok,A. (2005) RNAi mechanisms in Caenorhabditis elegans. FEBS Lett., 579, 5932-5939.
63. Matzke,M.A. and Matzke,A.J. (2004) Planting the seeds of a new paradigm. PLoS.Biol, 2, E133.
64. Nakayashiki,H. (2005) RNA silencing in fungi: mechanisms and applications. FEBS Lett., 579, 5950-5957.
65. Kavi,H.H., Fernandez,H.R., Xie,W. and Birchler,J.A. (2005) RNA silencing in Drosophila. FEBS Lett., 579, 5940-5949.
66. Wianny,F. and Zernicka-Goetz,M. (2000) Specific interference with gene function by double-stranded RNA in early mouse development. Nat.Cell Biol., 2, 70-75.
67. Ngo,H., Tschudi,C., Gull,K. and Ullu,E. (1998) Double-stranded RNA induces mRNA degradation in Trypanosoma brucei. Proc Natl Acad Sci U S A, 95, 14687-14692.
68. Zamore,P.D., Tuschl,T., Sharp,P.A. and Bartel,D.P. (2000) RNAi: double-stranded RNA directs the ATP-dependent cleavage of mRNA at 21 to 23 nucleotide intervals. Cell, 101, 25-33.
69. Elbashir,S.M., Lendeckel,W. and Tuschl,T. (2001) RNA interference is mediated by 21- and 22-nucleotide RNAs. Genes Dev., 15, 188-200.
70. Haase,A.D., Jaskiewicz,L., Zhang,H., Laine,S., Sack,R., Gatignol,A. and Filipowicz,W. (2005) TRBP, a regulator of cellular PKR and HIV-1 virus expression, interacts with Dicer and functions in RNA silencing. EMBO Rep., 6, 961-967.
71. Zhang,H., Kolb,F.A., Brondani,V., Billy,E. and Filipowicz,W. (2002) Human Dicer preferentially cleaves dsRNAs at their termini without a requirement for ATP. EMBO J., 21, 5875-5885.
72. Leuschner,P.J., Ameres,S.L., Kueng,S. and Martinez,J. (2006) Cleavage of the siRNA passenger strand during RISC assembly in human cells. EMBO Rep., 7, 314-320.
73. Matranga,C., Tomari,Y., Shin,C., Bartel,D.P. and Zamore,P.D. (2005) Passenger-strand cleavage facilitates assembly of siRNA into Ago2-containing RNAi enzyme complexes. Cell, 123, 607-620.
74. Rand,T.A., Petersen,S., Du,F. and Wang,X. (2005) Argonaute2 cleaves the anti-guide strand of siRNA during RISC activation. Cell, 123, 621-629.
75. Hammond,S.M., Bernstein,E., Beach,D. and Hannon,G.J. (2000) An RNA-directed nuclease mediates post-transcriptional gene silencing in Drosophila cells. Nature, 404, 293-296.
76. Noma,K., Sugiyama,T., Cam,H., Verdel,A., Zofall,M., Jia,S., Moazed,D. and Grewal,S.I. (2004) RITS acts in cis to promote RNA interference-mediated transcriptional and post-transcriptional silencing. Nat.Genet., 36, 1174-1180.
77. Verdel,A., Jia,S., Gerber,S., Sugiyama,T., Gygi,S., Grewal,S.I. and Moazed,D. (2004) RNAi-mediated targeting of heterochromatin by the RITS complex. Science, 303, 672-676.
78. Bartel,D.P. (2004) MicroRNAs: genomics, biogenesis, mechanism, and function. Cell, 116, 281-297.
79. Filipowicz,W. (2005) RNAi: the nuts and bolts of the RISC machine. Cell, 122, 17-20.
80. Bartel,D.P. and Chen,C.Z. (2004) Micromanagers of gene expression: the potentially widespread influence of metazoan microRNAs. Nat.Rev.Genet., 5, 396-400.
81. Lewis,B.P., Burge,C.B. and Bartel,D.P. (2005) Conserved seed pairing, often flanked by adenosines, indicates that thousands of human genes are microRNA targets. Cell, 120, 15-20.
82. Han,J., Lee,Y., Yeom,K.H., Kim,Y.K., Jin,H. and Kim,V.N. (2004) The Drosha-DGCR8 complex in primary microRNA processing. Genes Dev., 18, 3016-3027.
83. Yi,R., Qin,Y., Macara,I.G. and Cullen,B.R. (2003) Exportin-5 mediates the nuclear export of pre-microRNAs and short hairpin RNAs. Genes Dev., 17, 3011-3016.
84. Lund,E., Guttinger,S., Calado,A., Dahlberg,J.E. and Kutay,U. (2004) Nuclear export of microRNA precursors. Science, 303, 95-98.
85. Chendrimada,T.P., Gregory,R.I., Kumaraswamy,E., Norman,J., Cooch,N., Nishikura,K. and Shiekhattar,R. (2005) TRBP recruits the Dicer complex to Ago2 for microRNA processing and

gene silencing. Nature, 436, 740-744.

86. Hutvagner,G., McLachlan,J., Pasquinelli,A.E., Balint,E., Tuschl,T. and Zamore,P.D. (2001) A cellular function for the RNA-interference enzyme Dicer in the maturation of the let-7 small temporal RNA. Science, 293, 834-838.
87. Mourelatos,Z., Dostie,J., Paushkin,S., Sharma,A., Charroux,B., Abel,L., Rappsilber,J., Mann,M. and Dreyfuss,G. (2002) miRNPs: a novel class of ribonucleoproteins containing numerous microRNAs. Genes Dev., 16, 720-728.
88. Rhoades,M.W., Reinhart,B.J., Lim,L.P., Burge,C.B., Bartel,B. and Bartel,D.P. (2002) Prediction of plant microRNA targets. Cell, 110, 513-520.
89. Llave,C., Xie,Z., Kasschau,K.D. and Carrington,J.C. (2002) Cleavage of Scarecrow-like mRNA targets directed by a class of Arabidopsis miRNA. Science, 297, 2053-2056.
90. Brennecke,J., Stark,A., Russell,R.B. and Cohen,S.M. (2005) Principles of microRNA-target recognition. PLoS.Biol, 3, e85.
91. Grimson,A., Farh,K.K., Johnston,W.K., Garrett-Engele,P., Lim,L.P. and Bartel,D.P. (2007) MicroRNA targeting specificity in mammals: determinants beyond seed pairing. Mol Cell, 27, 91-105.
92. Yekta,S., Shih,I.H. and Bartel,D.P. (2004) MicroRNA-directed cleavage of HOXB8 mRNA. Science, 304, 594-596.
93. Waterhouse,P.M., Wang,M.B. and Lough,T. (2001) Gene silencing as an adaptive defence against viruses. Nature, 411, 834-842.
94. Voinnet,O. (2001) RNA silencing as a plant immune system against viruses. Trends Genet., 17, 449-459.
95. Wilkins,C., Dishongh,R., Moore,S.C., Whitt,M.A., Chow,M. and Machaca,K. (2005) RNA interference is an antiviral defence mechanism in Caenorhabditis elegans. Nature, 436, 1044-1047.
96. Wang,X.H., Aliyari,R., Li,W.X., Li,H.W., Kim,K., Carthew,R., Atkinson,P. and Ding,W. (2006) RNA interference directs innate immunity against viruses in adult Drosophila. Science, 312, 452-454.
97. Segers,G.C., Zhang,X., Deng,F., Sun,Q. and Nuss,D.L. (2007) Evidence that RNA silencing functions as an antiviral defense mechanism in fungi. Proc Natl Acad Sci U S A, 104, 12902-12906.
98. Lindbo,J.A. and Dougherty,W.G. (1992) Untranslatable transcripts of the tobacco etch virus coat protein gene sequence can interfere with tobacco etch virus replication in transgenic plants and protoplasts. Virol., 189, 725-733.
99. Voinnet,O., Pinto,Y.M. and Baulcombe,D.C. (1999) Suppression of gene silencing: a general strategy used by diverse DNA and RNA viruses of plants. Proc.Natl.Acad.Sci.U.S.A., 96, 14147-14152.
100. Yang,N. and Kazazian,H.H., Jr. (2006) L1 retrotransposition is suppressed by endogenously encoded small interfering RNAs in human cultured cells. Nat.Struct.Mol Biol, 13, 763-771.
101. Tam,O.H., Aravin,A.A., Stein,P., Girard,A., Murchison,E.P., Cheloufi,S., Hodges,E., Anger,M., Sachidanandam,R., Schultz,R.M. et al. (2008) Pseudogene-derived small interfering RNAs regulate gene expression in mouse oocytes. Nature, 453, 534-538.
102. Watanabe,T., Totoki,Y., Toyoda,A., Kaneda,M., Kuramochi-Miyagawa,S., Obata,Y., Chiba,H., Kohara,Y., Kono,T., Nakano,T. et al. (2008) Endogenous siRNAs from naturally formed dsRNAs regulate transcripts in mouse oocytes. Nature, 453, 539-543.
103. Bennasser,Y., Le,S.Y., Benkirane,M. and Jeang,K.T. (2005) Evidence that HIV-1 encodes an siRNA and a suppressor of RNA silencing. Immunity, 22, 607-619.
104. Lecellier,C.H., Dunoyer,P., Arar,K., Lehmann-Che,J., Eyquem,S., Himber,C., Saib,A. and Voinnet,O. (2005) A cellular microRNA mediates antiviral defense in human cells. Science, 308, 557-560.
105. Otsuka,M., Jing,Q., Georgel,P., New,L., Chen,J., Mols,J., Kang,Y.J., Jiang,Z., Du,X., Cook,R. et al. (2007) Hypersusceptibility to vesicular stomatitis virus infection in Dicer1-deficient mice is due to impaired miR24 and miR93 expression. Immunity, 27, 123-134.
106. Huang,J., Wang,F., Argyris,E., Chen,K., Liang,Z., Tian,H., Huang,W., Squires,K., Verlinghieri,G.

and Zhang,H. (2007) Cellular microRNAs contribute to HIV-1 latency in resting primary CD4(+) T lymphocytes. Nat.Med., 13, 1241-1247.

107. Li,F. and Ding,S.W. (2006) Virus counterdefense: diverse strategies for evading the RNA-silencing immunity. Annu.Rev.Microbiol., 60, 503-531.
108. Andersson,M.G., Haasnoot,P.C.J., Xu,N., Berenjian,S., Berkhout,B. and Akusjarvi,G. (2005) Suppression of RNA interference by adenovirus virus-associated RNA. J.Virol., 79, 9556-9565.
109. Haasnoot,J., de Vries,W., Geutjes,E.J., Prins,M., de Haan,P. and Berkhout,B. (2007) The Ebola virus VP35 protein is a suppressor of RNA silencing. PLoS Pathog., 3, e86.
110. Li,W.X., Li,H., Lu,R., Li,F., Dus,M., Atkinson,P., Brydon,E.W., Johnson,K.L., Garcia-Sastre,A., Ball,L.A. et al. (2004) Interferon antagonist proteins of influenza and vaccinia viruses are suppressors of RNA silencing. Proc.Natl.Acad.Sci.U.S.A., 101, 1350-1355.
111. Lu,S. and Cullen,B.R. (2004) Adenovirus VA1 noncoding RNA can inhibit small interfering RNA and microRNA biogenesis. J.Virol., 78, 12868-12876.
112. Wang,Y., Kato,N., Jazag,A., Dharel,N., Otsuka,M., Taniguchi,H., Kawabe,T. and Omata,M. (2006) Hepatitis C virus core protein is a potent inhibitor of RNA silencing-based antiviral response. Gastroenterology, 130, 883-892.
113. Haasnoot,J., Westerhout,E.M. and Berkhout,B. (2007) RNA interference against viruses: strike and counterstrike. Nat.Biotechnol., 25, 1435-1443.
114. Haasnoot,P.C.J. and Berkhout,B. (2006) Handbook of Experimental Pharmacology. Springer-Verlag Berlin Heidelberg, Heidelberg, Vol. 173, pp. 117-150.
115. Kim,D.H. and Rossi,J.J. (2007) Strategies for silencing human disease using RNA interference. Nat.Rev.Genet., 8, 173-184.
116. Caplen,N.J., Parrish,S., Imani,F., Fire,A. and Morgan,R.A. (2001) Specific inhibition of gene expression by small double-stranded RNAs in invertebrate and vertebrate systems. Proc.Natl. Acad.Sci.U.S.A., 98, 9742-9747.
117. Elbashir,S.M., Harborth,J., Lendeckel,W., Yalcin,A., Weber,K. and Tuschl,T. (2001) Duplexes of 21-nucleotide RNAs mediate RNA interference in cultured mammalian cells. Nature, 411, 494-498.
118. Williams,B.R. (1997) Role of the double-stranded RNA-activated protein kinase (PKR) in cell regulation. Biochem.Soc.Trans., 25, 509-513.
119. Stark,G.R., Kerr,I.M., Williams,B.R., Silverman,R.H. and Schreiber,R.D. (1998) How cells respond to interferons. Annu.Rev.Biochem., 67, 227-264.
120. Tuschl,T. and Borkhardt,A. (2002) Small interfering RNAs: a revolutionary tool for the analysis of gene function and gene therapy. Mol Interv., 2, 158-167.
121. Holen,T., Amarzguioui,M., Wiiger,M.T., Babaie,E. and Prydz,H. (2002) Positional effects of short interfering RNAs targeting the human coagulation trigger Tissue Factor. Nucleic Acids Res., 30, 1757-1766.
122. Brummelkamp,T.R., Bernards,R. and Agami,R. (2002) A system for stable expression of short interfering RNAs in mammalian cells. Science, 296, 550-553.
123. Siolas,D., Lerner,C., Burchard,J., Ge,W., Linsley,P.S., Paddison,P.J., Hannon,G.J. and Cleary,M.A. (2005) Synthetic shRNAs as potent RNAi triggers. Nat.Biotechnol., 23, 227-231.
124. Paddison,P.J., Caudy,A.A., Bernstein,E., Hannon,G.J. and Conklin,D.S. (2002) Short hairpin RNAs (shRNAs) induce sequence-specific silencing in mammalian cells. Genes Dev., 16, 948-958.
125. Kawasaki,H. and Taira,K. (2003) Short hairpin type of dsRNAs that are controlled by tRNA(Val) promoter significantly induce RNAi-mediated gene silencing in the cytoplasm of human cells. Nucleic Acids Res, 31, 700-707.
126. Zeng,Y., Wagner,E.J. and Cullen,B.R. (2002) Both natural and designed micro RNAs can inhibit the expression of cognate mRNAs when expressed in human cells. Mol.Cell, 9, 1327-1333.
127. Silva,J.M., Li,M.Z., Chang,K., Ge,W., Golding,M.C., Rickles,R.J., Siolas,D., Hu,G., Paddison,P.J., Schlabach,M.R. et al. (2005) Second-generation shRNA libraries covering the mouse and human

genomes. Nat.Genet., 37, 1281-1288.

128. Liu,Y.P., Haasnoot,J., Ter Brake,O., Berkhout,B. and Konstantinova,P. (2008) Inhibition of HIV-1 by multiple siRNAs expressed from a single microRNA polycistron. Nucleic Acids Res, 36, 2811-2824.
129. Lee,Y., Kim,M., Han,J., Yeom,K.H., Lee,S., Baek,S.H. and Kim,V.N. (2004) MicroRNA genes are transcribed by RNA polymerase II. EMBO J., 23, 4051-4060.
130. Borchert,G.M., Lanier,W. and Davidson,B.L. (2006) RNA polymerase III transcribes human microRNAs. Nat.Struct.Mol Biol, 13, 1097-1101.
131. Grimm,D., Streetz,K.L., Jopling,C.L., Storm,T.A., Pandey,K., Davis,C.R., Marion,P., Salazar,F. and Kay,M.A. (2006) Fatality in mice due to oversaturation of cellular microRNA/short hairpin RNA pathways. Nature, 441, 537-541.
132. Bridge,A.J., Pebernard,S., Ducraux,A., Nicoulaz,A.L. and Iggo,R. (2003) Induction of an interferon response by RNAi vectors in mammalian cells. Nat.Genet., 34, 263-264.
133. Sledz,C.A., Holko,M., de Veer,M.J., Silverman,R.H. and Williams,B.R. (2003) Activation of the interferon system by short-interfering RNAs. Nat.Cell Biol, 5, 834-839.
134. Gervaix,A., West,D., Leoni,L.M., Richman,D.D., Wong-Staal,F. and Corbeil,J. (1997) A new reporter cell line to monitor HIV infection and drug susceptibility in vitro. Proc Natl Acad Sci U S A, 94, 4653-4658.
135. Yam,P.Y., Li,S., Wu,J., Hu,J., Zaia,J.A. and Yee,J.K. (2002) Design of HIV vectors for efficient gene delivery into human hematopoietic cells. Mol Ther., 5, 479-484.
136. Greber,U.F. and Fassati,A. (2003) Nuclear import of viral DNA genomes. Traffic., 4, 136-143.
137. Wu,X., Li,Y., Crise,B. and Burgess,S.M. (2003) Transcription start regions in the human genome are favored targets for MLV integration. Science, 300, 1749-1751.
138. Coburn,G.A. and Cullen,B.R. (2002) Potent and specific inhibition of human immunodeficiency virus type 1 replication by RNA interference. J.Virol., 76, 9225-9231.
139. Lee,N.S., Dohjima,T., Bauer,G., Li,H., Li,M.J., Ehsani,A., Salvaterra,P. and Rossi,J. (2002) Expression of small interfering RNAs targeted against HIV-1 rev transcripts in human cells. Nat.Biotechnol., 20, 500-505.
140. Novina,C.D., Murray,M.F., Dykxhoorn,D.M., Beresford,P.J., Riess,J., Lee,S.K., Collman,R.G., Lieberman,J., Shankar,P. and Sharp,P.A. (2002) siRNA-directed inhibition of HIV-1 infection. Nat.Med., 8, 681-686.
141. Qin,X.F., An,D.S., Chen,I.S.Y. and Baltimore,D. (2003) Inhibiting HIV-1 infection in human T cells by lentiviral-mediated delivery of small interfering RNA against CCR5. Proc.Natl.Acad. Sci.U.S.A., 100, 183-188.
142. Boden,D., Pusch,O., Lee,F., Tucker,L. and Ramratnam,B. (2003) Human immunodeficiency virus type 1 escape from RNA interference. J.Virol., 77, 11531-11535.
143. Das,A.T., Brummelkamp,T.R., Westerhout,E.M., Vink,M., Madiredjo,M., Bernards,R. and Berkhout,B. (2004) Human immunodeficiency virus type 1 escapes from RNA interference-mediated inhibition. J.Virol., 78, 2601-2605.
144. Westerhout,E.M., Ooms,M., Vink,M., Das,A.T. and Berkhout,B. (2005) HIV-1 can escape from RNA interference by evolving an alternative structure in its RNA genome. Nucleic Acids Res., 33, 796-804.
145. Randall,G., Grakoui,A. and Rice,C.M. (2003) Clearance of replicating hepatitis C virus replicon RNAs in cell culture by small interfering RNAs. Proc Natl Acad Sci USA, 100, 235-240.
146. Leonard,J.N., Shah,P.S., Burnett,J.C. and Schaffer DV (2008) HIV evades RNA interference directed at TAR by an indirect compensatory mechanism. Cell Host.Microbe, 4, 484-494.
147. Berkhout,B., Verhoef,K., van Wamel,J.L.B. and Back,B. (1999) Genetic instability of live-attenuated HIV-1 vaccine strains. J.Virol., 73, 1138-1145.
148. Berkhout,B. (2009) A new Houdini act: multiple routes for HIV-1 escape from RNA interference mediated inhibition. Future Microbiology, in press.
149. Capodici,J., Kariko,K. and Weissman,D. (2002) Inhibition of HIV-1 infection by small interfering

RNA-mediated RNA interference. J.Immunol., 169, 5196-5201.

150. Joshi,P.J., North,T.W. and Prasad,V.R. (2005) Aptamers directed to HIV-1 reverse transcriptase display greater efficacy over small hairpin RNAs targeted to viral RNA in blocking HIV-1 replication. Mol.Ther., 11, 677-686.
151. Nishitsuji,H., Kohara,M., Kannagi,M. and Masuda,T. (2006) Effective suppression of human immunodeficiency virus type 1 through a combination of short- or long-hairpin RNAs targeting essential sequences for retroviral integration. J.Virol., 80, 7658-7666.
152. Surabhi,R.M. and Gaynor,R.B. (2002) RNA interference directed against viral and cellular targets inhibits human immunodeficiency virus type 1 replication. J.Virol., 76, 12963-12973.
153. Hu,W.Y., Myers,C.P., Kilzer,J.M., Pfaff,S.L. and Bushman,F.D. (2002) Inhibition of retroviral pathogenesis by RNA interference. Curr.Biol., 12, 1301-1311.
154. Nishitsuji,H., Ikeda,T., Miyoshi,H., Ohashi,T., Kannagi,M. and Masuda,T. (2004) Expression of small hairpin RNA by lentivirus-based vector confers efficient and stable gene-suppression of HIV-1 on human cells including primary non-dividing cells. Microbes.Infect., 6, 76-85.
155. Westerhout,E.M., Ter Brake,O. and Berkhout,B. (2006) The virion-associated incoming HIV-1 RNA genome is not targeted by RNA interference. Retrovirology, 3, 57-65.
156. Ter Brake,O. and Berkhout,B. (2005) A novel approach for inhibition of HIV-1 by RNA interference: counteracting viral escape with a second generation of siRNAs. Journal of RNAi and Gene Silencing, 1, 56-65.
157. Berkhout,B. (2004) RNA interference as an antiviral approach: targeting HIV-1. Curr.Opin.Mol. Ther., 6, 141-145.
158. Ter Brake,O., Konstantinova,P., Ceylan,M. and Berkhout,B. (2006) Silencing of HIV-1 with RNA interference: a multiple shRNA approach. Mol.Ther., 14, 883-892.
159. Leonard,J.N. and Schaffer,D.V. (2005) Computational design of antiviral RNA interference strategies that resist human immunodeficiency virus escape. J Virol, 79, 1645-1654.
160. Ter Brake,O., 't Hooft,K., Liu,Y.P., Centlivre,M., von Eije,K.J. and Berkhout,B. (2008) Lentiviral vector design for multiple shRNA expression and durable HIV-1 Inhibition. Mol Ther., 16, 557-564.