*Downloaded from UvA-DARE, the institutional repository of the University of Amsterdam (UvA)*
*http://hdl.handle.net/11245/2.25732*

| | |
|---|---|
| File ID | uvapub:25732 |
| Filename | Sloot12effectaniosmotic.pdf |
| Version | unknown |

SOURCE (OR PART OF THE FOLLOWING SOURCE):

| | |
|---|---|
| Type | article - letter to the editor |
| Title | The effect of aniosmotic media on the volume of the T-lymphocyte nucleus |
| Author | A.G. Hoekstra |
| Faculty | UvA: Universiteitsbibliotheek |
| Year | 1991 |

FULL BIBLIOGRAPHIC DETAILS:
http://hdl.handle.net/11245/1.419541

*Copyright*

*It is not permitted to download or to forward/distribute the text or part of it without the consent of the author(s) and/or copyright holder(s), other than for strictly personal, individual use.*

*UvA-DARE is a service provided by the library of the University of Amsterdam (http://dare.uva.nl)*
*(pagedate: 2014-08-24)*

# The effect of aniosmotic media on the volume of the T-lymphocyte nucleus

**Alfons G. Hoekstra*,**, Jacob A. Aten*** and Peter M. A. Sloot****

* Department of Biophysics, the Netherlands Cancer Institute, Plesmanlaan 121, 1066 CX Amsterdam, The Netherlands.

** Department of Computer Systems, University of Amsterdam, Kruislaan 409, 1098 SJ Amsterdam, The Netherlands.

*** Department of Radiobiology, Academic Medical Center, University of Amsterdam, Meibergdreef 9, 1105 AZ, Amsterdam, The Netherlands.

Published in

Biophysical Journal, vol. 59, pp. 1-10, 1991

# The effect of aniosmotic media on the volume of the T-lymphocyte nucleus

**Alfons G. Hoekstra*,**, Jacob A. Aten*** and Peter M. A. Sloot****

* Department of Biophysics, the Netherlands Cancer Institute, Plesmanlaan 121, 1066 CX Amsterdam, The Netherlands.

** Department of Computer Systems, University of Amsterdam, Kruislaan 409, 1098 SJ Amsterdam, The Netherlands.

*** Department of Radiobiology, Academic Medical Center, University of Amsterdam, Meibergdreef 9, 1105 AZ, Amsterdam, The Netherlands.

## Abstract

Time resolved measurements of the nuclear volume response of human peripheral T-lymphocytes, under aniosmotic conditions, are presented. In the experiments slit scanning FlowCytometry methods were used. We propose an extension to the standard solid viscoelastic model to interpret the observed dynamical behavior of the nucleus. It is shown that experimental and theoretical evidence indicates a passive nuclear response merely induced by a mechanical link (i.e. the cytoskeleton) between the cell membrane and the nuclear envelope. Implications of this work to the field of cellular mechanics and cytoskeletal rheology are surveyed.

## Introduction

Recently it was shown experimentally that the light scattered by lymphocytes in the forward directions in aniosmotic media, varies inversely with cell volume (McGann, Walterson

and Hogg, 1988)* . These results appear to be inconsistent with the observation that low-angle lightscattering is proportional to particle size (Sloot and Figdor, 1986). We solved this paradox by including changes in the optical density of the cell, induced by variations in the osmolarity of the solution, in a light scattering model (Sloot, Hoekstra and Figdor, 1988). A crucial point in this model is the assumption of a nuclear volume response directly related to the cytoplasmic volume response. It is well known that *isolated* nuclei do not respond to aniosmotic conditions (Roodyn, 1969). On the other hand it is not clear whether nuclei of *intact* cells can respond to these conditions. Furthermore, if the nuclei of intact cells respond to aniosmotic conditions, as predicted by the light scattering theory, then the mechanism of this response in not clear. We therefore hypothesized a physical link between the cytoplasmic membrane and the nuclear envelope (the cytoskeletal network) resulting in an induced nuclear volume response.

The response of lymphocytes in aniosmotic media has been studied extensively. It was noted recently that the behavior of human B- and T-lymphocytes in hypoosmotic media is completely different. After suspension in a hypoosmotic medium the total cell volume response of T-lymphocytes consists of two steps. First, a fast initial volume increase and next, for cells suspended in a NaCl solution, a slow decrease in volume back to the initial isoosmotic value (Ben-Sasson, Shaviv, Bentwich and Doljanski, 1975). In KCl solutions, the initial fast increase in cell volume is followed by a much slower increase in cell volume. The first step is interpreted as an osmotic flow of $H_2O$ through the membrane into the cell. The increase in volume is well described by the Boyle van 't Hoff relation (McGann, Walterson and Hogg, 1988) The second, volume regulatory step, is explained by the activation of potassium and chloride pathways (Ben-Sasson, Shaviv, Bentwich and Doljanski, 1975; Gelfand, Cheung, Ha and Grinstein, 1984). In contrast to T-lymphocytes, human B-lymphocytes in hypoosmotic NaCl solutions show the initial (fast) volume increasebut remain in a swollen state (Cheung, Roy, Grinstein and Gelfand, 1982; Gelfand, Cheung, Ha and Grinstein, 1984).

Under hyperosmotic conditions, (T- and B-) lymphocytes decrease in volume but are not capable of any volume regulation (Hempling, 1974; Hempling, 1977). This volume decrease

---

* A comparable effect, the inverse relationship between the transmittance of red blood cell suspensions and the red blood cell volume, was already known empirically in the 1930's (Ørskov, 1935)

also follows the Boyle van 't Hoff relation (Hempling, 1974; McGann, Walterson and Hogg, 1988).

Apart from a total cell volume response, analysis of Transmission Electron Microscopy recordings of lymphocytes also revealed a *nuclear* response. (Schmid-Schönbein, shih and Chien, 1980). However, no attention was paid to the sometimes complex total cell volume response of lymphocytes as a function of time, which might affect the nuclear response. The question why the nucleus responds to aniosmotic conditions was also not addressed.

In this study we introduce time resolved measurements of the nuclear volume response of human peripheral T-lymphocytes, after suspension in both hypoosmotic- and hyperosmotic media (with dominant ion $K^+$ or $Na^+$).

A mechanistic interpretation of the nuclear response is presented. We modeled the response of the nuclei as a passive phenomenon, induced by a mechanical link between cell membrane and nuclear envelope. The data are fitted to an extended standard solid viscoelastic model. The nature of the mechanical link is discussed in terms of the cytoskeleton.

## Materials and Methods

- *Cell handling*

Isolation of cells

Large amounts of human peripheral T-lymphocytes were obtained by Computer Assisted Centrifugal Elutriation (CACE), as described in detail by Sloot et al. and Figdor et al. (Sloot, Carels, Tensen and Figdor, 1987; Figdor, Bont, de Vries and van Es, 1981).

Preparation of suspending media

The Phosphate-Buffered Saline (PBS, in this paper referred to as $Na^+$ medium) was prepared according to Dulbecco and Vogt (Dulbecco and Vogt, 1954). Phosphate-Buffered potassium medium (PBK, this paper: $K^+$ medium) is identical to $Na^+$ medium with the sodium and potassium interchanged, and the calcium concentration halved (see also Ben-Sasson, Shaviv, Bentwich and Doljanski, 1975).

A stock solution of 10x isoosmotic $K^+$ - and $Na^+$ medium was prepared. This solution was diluted with distilled water to obtain media with the desired osmolarity. The isoosmotic osmolarity $\Pi_0$ equals 285 mOsm/l. The aniosmotic media are characterized by $\Pi_0/\Pi$, with $\Pi$ the osmolarity of the aniosmotic medium. If $\Pi_0/\Pi$ is > 1, the medium is hypoosmotic; for $\Pi_0/\Pi < 1$ the medium is hyperosmotic.

The osmolarity of the media was measured by means of a freezing point depression method (Knauer Halbmikro-Osmometer).

Stock suspension

Freshly isolated T-lymphocytes were resuspended in isoosmotic $Na^+$ medium at a concentration of $10^6$ cells/ml. We refer to this as the stock cell suspension.

Staining

For the measurement of the nuclear diameter in the slit scan FlowCytometer (see next section), the nucleus of the cells was stained with the fluorescent dye Hoechst 33342 (Sigma, St Louis, Mo, USA). Hoechst 33342 (Hö) was added to 200 µl stock cell suspension to a final concentration of 2 µg/ml Hö, and incubated at room temperature for 20 minutes.

As a control experiment the total cell volume response in an aniosmotic medium was measured (with the Coulter Counter, see next section) in the absence and presence of Hö. Both responses were equal.

In one experiment the total cell volume was also measured in the FlowCytometer. The cells were stained with carboxyFluoresenceDiacetate (cFDA; Bruning, Kardol and Arentzen, 1980). A stock solution of 20 mg/ml cFDA in acetone was prepared; 5 μl of this stock solution was added to 2.5 ml isotonic $Na^+$ medium, with 250 μl stock cell suspension and incubated for 15 minutes at $37^0$ C. After incubation the cells were washed twice with isotonic $Na^+$ medium and resuspended in 50 μl isotonic $Na^+$ medium. Under the fluorescence microscope, the cells showed a bright, homogeneous fluorescence. For times extending beyond about 15 minutes after staining the cells developed protuberances and showed bleaching of the fluorescence.

Resuspension of cells in aniosmotic media

The cells were resuspended in the aniosmotic media in two different ways, depending on the method of analysis used (see next section). In case of the Coulter measurements (total cell volume measurement), 100 μl of stock cell suspension was added to 10 ml of aniosmotic medium.

The procedure for the slit scan FlowCytometry experiments was as follows: after staining, the cells were centrifuged at 200 g for 3 minutes, the supernatant was removed and the cells were resuspended in 250 μl aniosmotic medium, with 2 μg/ml Hö added to maintain a constant level of staining (this was not necessary for cFDA staining). Addition of low concentrations of Hö did not affect the osmolarity of the media. Immediately after resuspension (within 10-20 seconds), the measurements on the cell suspensions were started.

- *Measuring the total cell volume*

The total cell volume was obtained by electronic sizing with a Coulter counter model ZF connected to a Coulter channelyzer model C 1000. Immediately after the resuspension of cells in the aniosmotic media, the cells were transported to the Coulter counter and after ± 1 minute the first measurement was performed. Typically about 20,000 cells were sized in approximately 20 seconds. The time between two measurements was 2 minutes.

After sizing of the cells, a hardcopy of the volume distribution was produced and digitized with a Nummonics 1220 digitizer into memory of a Hewlett Packard HP 9816 computer. The mean value of the volume distribution $V_m$ was calculated. As lymphocytes show a homogeneous response to an osmotic shock, $V_m$ is a good parameter to represent the volume of the cell distribution (Ben-Sasson, Shaviv, Bentwich and Doljanski, 1975).

Since we measure volumes in aniosmotic media ($V_{cell}$) relative to the isoosmotic volume $V(0)_{cell}$ by

$$\left[\frac{V(t)}{V(0)}\right]_{cell} = \frac{V_m(t)}{V_m(0)} \quad , \qquad (1)$$

with t the time after the osmotic shock and $V_m(0)$ the mean volume of the isoosmotic volume distribution, an absolute calibration of the apparatus is not necessary (Segel, Cokelet and Lichtman, 1981; Grover, Naaman, Ben-Sasson and Doljanski, 1969).** Here it is assumed that the electronic shape factor is constant for lymphocytes as a function of the osmolarity of the suspending medium (Segel, Cokelet and Lichtman, 1981).

---

** The measured voltage pulse height Δv as a function of volume V of a particle in the Coulter Counter is Δv=KρiV, with i the constant current through the orifice, r the electric resistivity of the medium and K a formfactor dependent on the particle shape and orifice geometry. The electric resistivity of the media is a function of the osmolarity, therefore particles of the same volume in different media produce different Δv. This source of error was investigated by measuring 10 μm polystyrene spheres (Duke Scientific) in media with $\Pi_0/\Pi$ = 0.5 and 1.5. The measured $V_m/V(0)_m$ was 0.98 and 1.00 for $\Pi_0/\Pi$ = 0.5 and 1.5 respectively. This small systematic error is considered insignificant.

- *Measuring the nuclear volume*

Two techniques were applied to determine the nuclear volume: Fluorescence Microscopy and FlowCytometry.

Fluoresence Microscopy

Following the resuspension of the cells, a drop of stained cells in ani- or isoosmotic medium was placed on an objective glass and immediately covered to prevent water evaporation and subsequent osmolarity changes. The cells were examined under a Zeiss microscope with 40x objective -, 10x ocular magnification and UV illumination. The cells were photographed and the negatives were further analyzed on the Nummonics 1220 digitizer. Absolute calibration of the measured nuclear diameters was not necessary since the nuclear diameters in aniosmotic media are measured relative to the isoosmotic values.

FlowCytometry

The stained cell suspensions were analyzed using a cytofluorograph 30 FlowCytometer (Becton Dickinson, Mountain View, CA, USA) with a Spectra Physics (Mountain View, CA, USA) 2000 Argon ion laser tuned to the UV. The measuring principle is drawn schematically in Fig. 1. Special purpose optics, using crossed cylindrical lenses, was applied to focus the laser beam at the center of the quartz flow channel. The laser beam in the focal plane is line shaped to produce a 'slit' of laser illumination through which the stained cells flow (see e.g. van Dilla, Dean, Laerum and Melamed, 1985, chapter 2). After hydrofocussing the cells pass the focal plane one by one. The dye is excited by the intense UV beam and the resulting fluorescence signal is measured as a function of time. The width of the fluorescence pulse is a measure of the nuclear diameter.

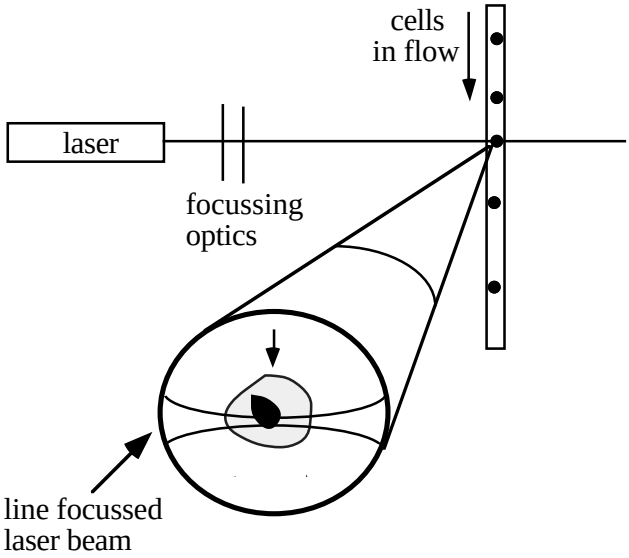


FIGURE 1: A schematic drawing of the slit scan principle. Hydrofocussed cells in a flow pass the line focussed laser beam one by one. The stained nucleus produces a fluorescence signal. The width of the fluoresence pulse is a measure of the nuclear diameter.

The fluorescence signal of the illuminated cell nuclei was detected through a 490 nm bandpass filter by a photomultiplier. The fluoresence pulse shape was obtained by digitizing the signals from the photomultiplier at a rate of 10 Mhz and storing into the memory of a dedicated computer system for slit scanning analysis. The values of the total (integrated) fluorescence intensity and the width of the fluorescence pulse (defined as the full width at half maximum; fwhm) from individual particles are stored in a 2-dimensional histogram (Aten, 1984). These modes of operation are shown schematically in Fig. 2.

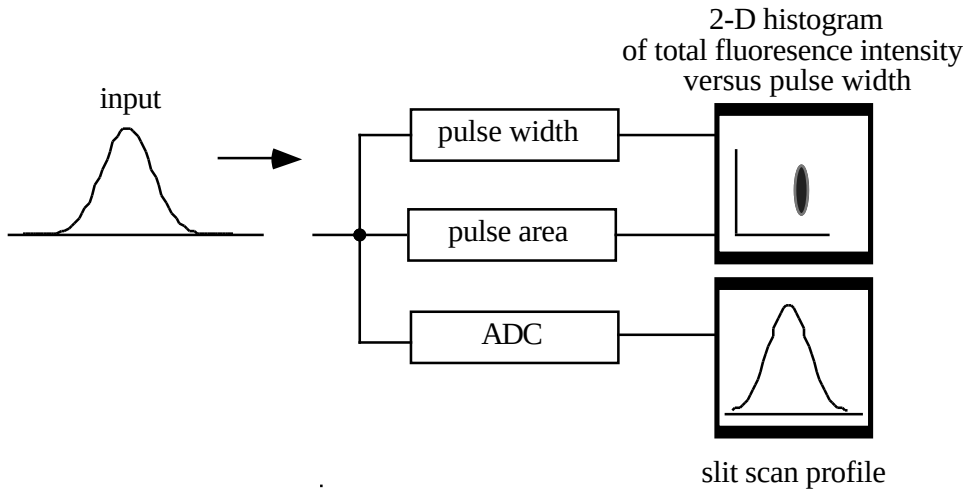


FIGURE 2: Modes of operation of the data aquisition equipment. In the experiments described in this paper the 2-dimensional histogram is measured and further analyzed to obtain an average pulse width. The pulse area box measures the total (integrated) fluoresence intensity; the ADC box measures pulse profiles and the pulse width box measures the width of the fluoresence pulse.

Approximately 500 cells per second are analyzed. After 15 seconds the system has sampled enough cells to allow reliable off-line statistical analysis of the 2-dimensional histogram. The histogram is stored and the system starts filling a new histogram. Typically 15 subsequent histograms were measured.

From the 2-dimensional histogram a (1-dimensional) pulse width histogram is calculated by integration over the total intensity. An average pulse width is obtained by calculating the first moment of the pulse width histogram. This value is used to calculate the nuclear diameter.

The measured fluorescence intensity I(t) as a function of time t (i.e. the pulse profile) is a convolution of the nuclear fluorescence emission distribution c(x,y,z) with the laser irradiance profile H(z) in the focal plane (van Dilla, Dean, Laerum and Melamed, 1985):

$$I(vt) = \int c(x, y, vt - \xi)\, H(\xi)\, d\xi dxdy \,, \qquad (2)$$

where v is the velocity of cell flow along the z axis. After deconvolution of I(vt) with H(z), the nuclear profile C(z) is found, where

$$C(z) = \int c(x, y, z)\, dxdy \,. \qquad (3)$$

Assume that the nucleus is a sphere and that c(x,y,z) is homogeneous. It can be shown that C(z) is, to third order in z, a Gaussian function with width $1/2\sqrt{2}D$, where D is the diameter of the nucleus. The laser intensity H(z) is also a Gaussian function. Convolution of two Gaussian functions yields a new Gaussian function. The variance of this new function is the sum of the variances of the original functions. Therefore, the width of C(z) is:

$$\text{width}(C(z)) = \sqrt{(\text{width}(I(vt))^2 - (\text{width}(H(z))^2} \,. \qquad (4)$$

In our system the nuclear diameter of the T-lymphocytes was approximately a factor of 4 larger than the width of the focussed laser beam. Therefore the measured pulse width is, within a few per cent, equal to $1/2\sqrt{2}D$.

The volume of the nucleus $V_N(t)$ at time t, relative to the isotonic value $V_N(0)$ can now be calculated from

$$\frac{V_N(t)}{V_N(0)} = \left[\frac{w_m(t)}{w_m(0)}\right]^3, \qquad (5)$$

where $w_m$ is the mean of the pulse width distribution and the nucleus of the lymphocyte is assumed to be a sphere (Schmid-Schönbein, Shih and Chien, 1980). The linearity of $w_m$ with particle diameter was verified by introducing test spheres of different diameter in the system. The measured $w_m$ was proportional to the test spheres diameter (data not shown).

## Results

In this section the measurements of the nuclear volume response of human peripheral T-lymphocytes in aniosmotic media are presented. This response was measured in both hypo- and hyperosmotic conditions for two different media ($Na^+$ and $K^+$ media), as a function of time ($0 < t < 6$ minutes). The total cell volume response depends on these parameters. Since the volume regulatory phase in hypoosmotic medium is not observed in hyperosmotic medium and the dominant ion in the hypoosmotic medium determines the nature of the volume regulation, we expect the nuclear volume response to depend also on these parameters.

The first step was to assess if, under various aniosmotic conditions, a nuclear volume response could be observed at all. Furthermore, in this pilot experiment, the results of the Fluorescence Microscopy and the FlowCytometry have been compared.

We prepared two aniosmotic solutions (hyperosmotic $Na^+$ medium with $\Pi_0/\Pi = 0.8$ and hypoosmotic $Na^+$ medium with $\Pi_0/\Pi = 1.4$) and isoosmotic $Na^+$ medium ($\Pi_0 = 285$ mOsm/l). Freshly isolated lymphocytes were stained as described in the previous section, and resuspended in the isoosmotic- and the two aniosmotic media. After 15 minutes, cells were introduced into the FlowCytometer and the nuclear diameter was measured. This procedure was repeated 4 times for all media. The nuclear diameter in isoosmotic medium remains constant over a long period of time. The results are shown in Table 1.

| | | $\Pi_0/\Pi$ | |
|---|---|---|---|
| | | 0.8 | 1.4 |
| $V/V_0$ | FCM | 0.77 (0.02) | 1.07 (0.02) |
| | FM | 0.7 (0.1) | 1.3 (0.3) |

Table 1: The nuclear volume response after resuspension of T-lymphocytes in a hyperosmotic - and hypoosmotic $Na^+$ medium, measured by Fluorescence Microscopy (FM) and FlowCytometry (FCM). The FCM data are the average of 4 independent measurements per medium. The FM data are based on the measurement of 80 nuclei per medium. The numbers in brackets are standard deviations.

The Fluorescence Microscopy data are also tabulated in Table 1; 5 minutes after resuspension the cells were placed under the microscope and photographed. The nuclei appeared to be round. In all cases the diameters of 80 nuclei were measured.

A nuclear volume response is unambiguously observed, both by pulse width FlowCytometry analysis and by Fluorescence Microscopy. Apart from the small standard deviation in FlowCytometry, compared to Fluorescence Microscopy, the statistics in FlowCytometry are much better due to the larger amount of cells that can be measured in a typical experiment. In the following only FlowCytometry has been applied to obtain the nuclear volume.

Next, the total cell volume response and the nuclear volume response were measured simultaneously as a function of time. Four aniosmotic solutions were prepared; two $K^+$ - and two $Na^+$ media, both with $\Pi_0/\Pi = 0.5$ and $\Pi_0/\Pi = 1.5$ respectively, and isoosmotic $K^+$ and $Na^+$ media. A freshly isolated pool of lymphocytes was divided in two parts. The first part was used to measure the total cell volume response, whereas the second part was used to measure the nuclear volume response (by means of Coulter Counter and FlowCytometry respectively). Both experiments were repeated four times for all the four aniosmotic media and the two isoosmotic media. The averaged results are shown in Fig. 3a-d.

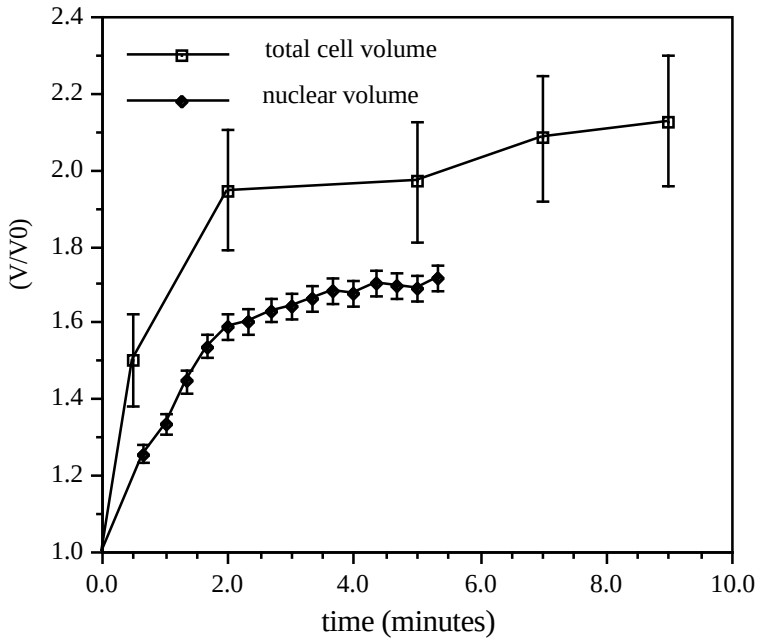


FIGURE 3a: The total cell volume response and the nuclear volume response as a function of time, after resuspension of cells at t = 0 minutes; $K^+$ medium, $\Pi_0/\Pi$ = 1.5. The error bars indicate the standard deviation of 4 independent measurements

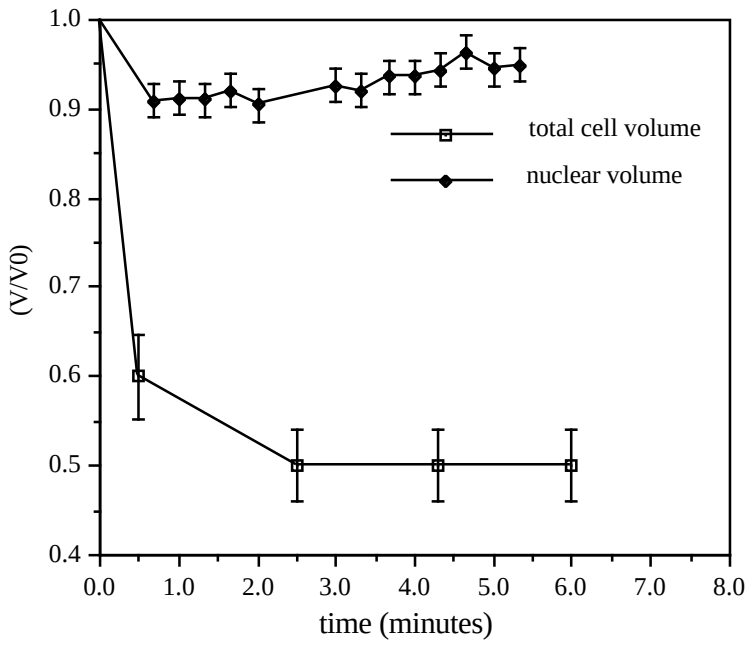


FIGURE 3b: The total cell volume response and the nuclear volume response as a function of time, after resuspension of cells at t = 0 minutes; $K^+$ medium, $\Pi_0/\Pi$ = 0.5. The error bars indicate the standard deviation of 4 independent measurements

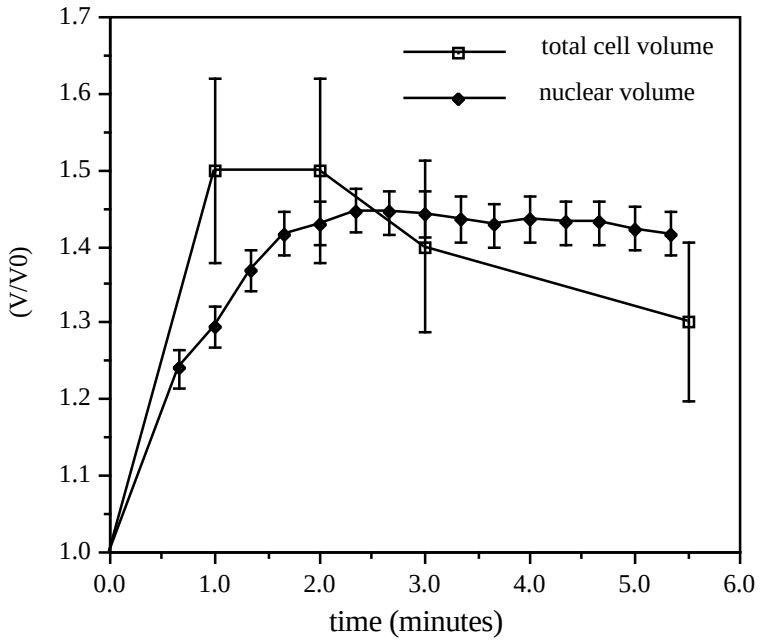


FIGURE 3c: The total cell volume response and the nuclear volume response as a function of time, after resuspension of cells at t = 0 minutes; $Na^+$ medium, $\Pi_0/\Pi$ = 1.5. The error bars indicate the standard deviation of 4 independent measurements

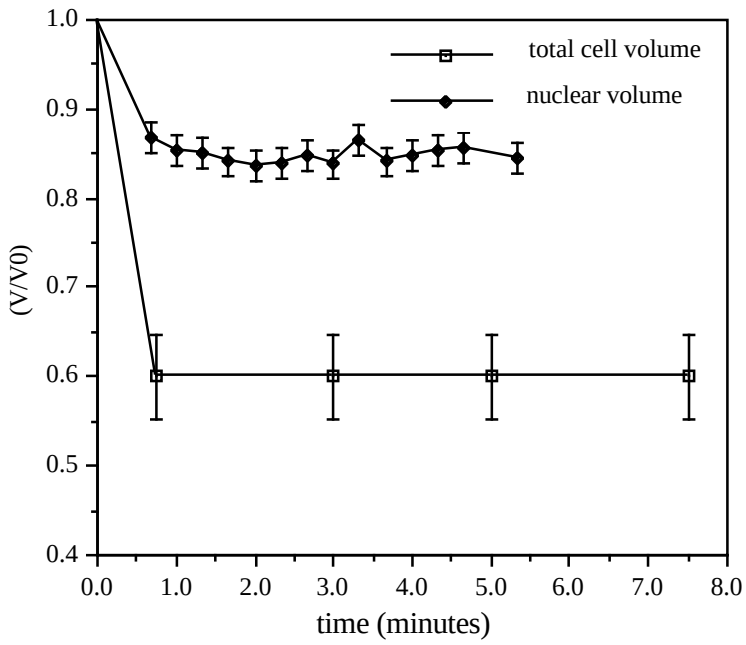


FIGURE 3d: The total cell volume response and the nuclear volume response as a function of time, after resuspension of cells at t = 0 minutes; $Na^+$ medium, $\Pi_0/\Pi$ = 0.5. The error bars indicate the standard deviation of 4 independent measurements

First we note that the behavior of the total cell volume response of the T-lymphocytes is as expected. In hyperosmotic medium the volume decreases fast to an end value. After this fast response no further volume changes occur (Coulter Counter measurements at t = 30 minutes also reveal no further volume change, data not shown). The total cell volume response in hypoosmotic medium clearly shows the two steps. A fast increase in volume is followed by the volume regulatory phase. The decrease in volume in $Na^+$ medium is somewhat slow compared to experiments reported in literature (Ben-Sasson, Shaviv, Bentwich and Doljanski, 1975), but eventually (after ± 50 minutes) the volume returns to the initial isoosmotic value (data not shown).

The measured nuclear response, under the four different aniosmotic conditions, shows resemblance to the total cell volume response. In both $K^+$ - and $Na^+$ hyperosmotic medium the nuclear volume reaches a plateau after ±1 minute but the relative volume decrease of the nucleus is much less than the total cell volume decrease ($Na^+$ medium: $[V/V_0]_{nucleus}$ ~ 0.85 versus $[V/V_0]_{cell}$ ~ 0.6; $K^+$ medium: $[V/V_0]_{nucleus}$ ~ 0.9 versus $[V/V_0]_{cell}$ ~ 0.5). Furthermore it can be seen from Fig. 3b that in hyperosmotic $K^+$ medium the nucleus shows a tendency to increase in volume for t > 3 minutes.

The nuclear volume response under hypoosmotic conditions is much more pronounced. The fast increase in volume, followed by a volume regulatory phase, is observed in both hypoosmotic media. The first part of the increase in nuclear volume (0 < t < 2 minutes) is much slower (order of minutes) with respect to the total cell volume (order of seconds). After ±2 minutes in $K^+$ medium the rate of volume increase of the total cell volume and the nuclear volume are approximately the same. For longer times the nuclear volume seems to reach a plateau value, whereas the total cell volume continues to increase.

On the other hand, in hypoosmotic $Na^+$ medium the increase in nuclear volume is followed by a very slow (that is, slower then the total cell volume) decrease in volume.

## Discussion

The response of lymphocytes after suspension in aniosmotic media has received much attention over the past years, especially the details of the volume regulatory phase and its potential as a diagnostic tool are extensively studied (Ben-Sasson, Shaviv, Bentwich and Doljanski, 1975; Gelfand, Cheung, Ha and Grinstein, 1984). The response of intracellular structures, such as the nucleus, has barely been investigated.

Relying on a physical (light scattering) model, we predicted a nuclear response (Sloot, Hoekstra and Figdor, 1988) although it is known that isolated nuclei, due to large pores in the nuclear membrane, do not behave as osmometers (Roodyn, 1969). We have demonstrated in Table 1 and Fig. 3 that the nuclei of intact lymphocytes *do* respond to several aniosmotic conditions.

In this section the mechanism of the nuclear volume response will be discussed. It will be shown that the response is a passive viscoelastic response, and the role of the cytoskeleton in this response will be discussed. Finally, a possible link between this work and the field of cellular mechanics and cytoskeletal rheology is surveyed.

Across the cell membrane a chemical potential gradient is the driving force of the fast total cell volume response. The nucleus of intact eukariotic cells has large pores to allow the active transport of macromolecules (Newport and Forbes, 1987). As a consequence, a chemical potential gradient across the nuclear membrane can not exist. Another possible mechanism for a nuclear response is a conformational change of chromatin in the nucleus due to variations in ion concentration. The volume of isolated nuclei of rat liver cells varies with $Mg^{++}$ concentrations. However, this effect is only observed for divalent cations (Grattarola, Carlo, Giannetti, Finollo, Viviani and Chiabrera, 1985; Manning, 1978). The nucleus of intact cells, like isolated nuclei, cannot respond in an active way to variations in osmotic pressure, induced by $K^+$ or $Na^+$ concentration changes.

We suggested in earlier work that the fibrillar networks inside the cell might regulate the changes in size of the nucleus (Sloot, Hoekstra and Figdor, 1988) i.e. that the nuclear response

is induced via a mechanical link between the cell membrane and the nuclear envelope, and that the cytoskeleton provides this mechanical link.

The main components of the cytoskeleton (microfilaments, microtubules and intermediate filaments) occur in the cytoplasm of lymphocytes (Yahara and Edelman, 1975). Dense microfilamentous networks are observed underneath the plasma membrane (Yahara and Edelman, 1975; Sundqvist, Otteskog, Wagner, Thorstensson and Utter, 1980; Fagraeus, Lidman and Biberfeld, 1974; de Petris, 1975) as well as in regions close to the nuclear membrane (Yahara and Edelman, 1975). The microtubules are usually separated from the plasma membrane by microfilaments (de Petris, 1975). Microfilaments, microtubules and intermediate filaments form a highly interconnected structural network; the cytoskeleton (Schliwa and van Blerkom, 1981; Griffith and Pollard, 1978). The microfilaments are joined to the plasma membrane (Braun and Unanue, 1983; Barber and Crumpton, 1976; Hoessli, Rungger-Brändle, Jockusch and Gabiani, 1980) and it is shown that the nuclear matrix is physically associated with the cytoskeleton (Braun and Unanue, 1983; Capco, Wan and Penman, 1982). These observations suggest that a mechanical link between the cell membrane and the nuclear membrane exists.

Next we consider the nuclear response in more detail by assuming that the response is a linear viscoelastic response. Leukocytes are viscoelastic (Elson, 1988). The relaxation of leukocytes after small deformations can be modeled by the standard solid viscoelastic model (Schmid-Schönbein,Sung, Tözeren, Skalak and Chien, 1981; Sung, Dong, Schmid-Schönbein, Chien and Skalak, 1988 ), where the leukocyte is assumed to be an isotropic homogeneous spherical body. We have extended the standard solid viscoelastic model with a Voigt element to simulate the retardation of the nucleus. In appendix A this model is presented and the measurements are fitted to this model. The result of this fit for $Na^+$ hypoosmotic medium is shown in Fig. A4. For $t < 4$ minutes the nuclear response can be fitted to this model with one retardation time. This clearly indicates that the nuclear response may be modeled by a passive viscoelastic response.

In phase I (see appendix A) the fast initial total cell volume response was considered as a step function. It is known that this initial response is very fast; within 20 seconds an end value

is reached (see e.g. Ben-Sasson, Shaviv, Bentwich and Doljanski, 1975). On the time scale of the nuclear response (which is order of minutes) this fast initial response may be regarded as a step function.

It is important to note that in Fig. A4 the nuclear response was fitted to the model for $t < t_1$ (= 1.8 minutes) yielding the model parameter $\tau$. With known values for $\tau$, $\tau_c$ and $t_1$, the response for $t > t_1$ is calculated. For $t_1 < t < 4$ minutes the model calculations agree with the measurements.

For $t > 4$ minutes the calculations decrease too fast. A possible explanation for this discrepancy can be found in the suggested behavior of actin filament solutions. Actin filament solutions appear to be viscoelastic solids on one time scale, but show liquid like behavior over longer periods of time (Elson, 1988). If actin filaments play an important role in the mechanics of a cell, similar behavior might occur. In the study of leukocyte deformation and recovery two models emerged (Elson, 1988). On the one hand the above-mentioned solid like behavior for relative small deformations over a short time interval ($t < \pm 200$ seconds) and on the other hand a viscous like behavior for large deformations and long periods of time. This difference might be explained by the behavior of actin filament solutions, as suggested by Elson (Elson, 1988). The deviations from the proposed solid like model, as observed in Fig. A4, may be explained by a change of the cytoskeleton from a solid like to a liquid like behavior. Obviously, more detailed studies to unravel these data are necessary.

In appendix A we noted that the time steps in the measurement of the total cell volume response are too long to allow for an accurate evaluation of the response integral (A6). For the $Na^+$ hypoosmotic medium this response could be approximated by simple functions, allowing an analytical solution of Eq. (A6). This is not the case for the $K^+$ hypoosmotic medium. Therefore, in a preliminary experiment, we measured in the FlowCytometer the total cell volume response with the same time resolution as the nuclear response. The cells were stained with cFDA (see Materials and Methods). From these measurements it was concluded that the total cell volume response can be measured accurately in the FlowCytometer, after staining of the cells with cFDA (data not shown). In the future we will focus on dual-staining techniques to measure simultaneously the total cell volume response and the nuclear response of each

individual cell. These improvements will allow more accurate analysis in terms of the proposed extended standard solid viscoelastic model.

The hyperosmotic data cannot be fitted by the proposed viscoelastic model because one expects the end value $[V/V_0]_{cell}$ and $[V/V_0]_{nucleus}$ to be equal. Obviously the nucleus resists further shrinkage beyond $[V/V_0]_{nucleus} < 0.9$ (see Fig. 3). We suggest that this nonlinear behavior is caused by the increase in density in the nucleus during the shrinking. In Table 1 a hyperosmotic response of 0.77 was measured for $\Pi_0/\Pi = 0.8$, whereas in Fig. 3d a response of 0.85 was obtained for $\Pi_0/\Pi = 0.5$. These measurements were performed on T-lymphocytes from different donors. The difference in the results is probably due to donor variability.

A complete three dimensional 'concentric sphere Lamb model' in combination with high resolution measurements, should permit detailed analysis in terms of macroscopic rheological properties. This will result in finding $k_i$ and $\mu_i$ for both the cytoplasm and the nucleus. It is our opinion that these macroscopic properties can then be combined with microscopic theories, such as Nossal's study of the elasticity of cytoskeletal networks (Nossal, 1988). Experiments with cytochalasin D suggest that the deformability of lymphocytes is mainly determined by the nucleus (Elson, 1988). In our experiment however, cytochalasin D or other cytochalasins, would have a drastic effect on the nuclear response since cytochalasins completely disrupt the cytoskeleton (Schliwa, 1982, Britch and Allen, 1981).

From in vitro studies much is known about the polymerization of actin, the rheological properties of actin gels and the influence of numerous chemical agents on these properties (e.g. Godette and Frieden; 1986, Tadanao, Zaner and Stossel, 1987; Cooper, 1987). The translation of this knowledge to the observed in vivo effects of e.g. cytochalasin is still not clear (Cooper, 1987). The type of experiments and data analysis as described in this work may serve as a suitable test system to assemble the data on isolated cytoskeletal components and the observed in vivo effects.

## Conclusions

In this paper we present both theory and experimental techniques to study the dynamical behavior of osmotically active lymphocytes.

In contrast to the general notion that the nuclei of lymphocytes do not respond to aniosmotic conditions, we predicted a definite response of the nuclei. The data presented here unambiguously support this view. We have shown that the nuclear response is a complex function of time and is very sensitive to the aniosmotic environment.

A linear viscoelastic model is presented to interpret our measurements. This extension to the standard solid viscoelastic model regards the nuclear response as a passive response which is induced by a mechanical link between the cellular- and the nuclear membrane. We suggest that the cytoskeleton provides this mechanical link. Our model is well suited to describe the observed response.

We believe that our measurements can provide knowledge on rheological properties of the nucleus and the cytoskeleton in vivo that is of crucial importance to understand cellular mechanics.

## Acknowledgements

We wish to thank J. Klomp, F van Buitenen and R. Houben of the Immunology department of the Netherlands Cancer Institute for operating the CACE equipment, Dr. J. Borst of the Immunology department of the Netherlands Cancer Institute for providing the cFDA, and Prof. Dr. van der Wallen Mijnlieff of the Applied Physics department of the University of Twente, the Netherlands, for helpful discussions.

## References


Aten, J.A., 1984. The data flow-2 multidimensional multi-channel analyzer with built-in slit scan storage mode. B.E.M. sheet 73, Butech Electronics, Vinkeveen, the Netherlands.

Barber, B.H., and M.J. Crumpton. 1976. Actin associated with purified lymphocyte plasma membrane. *FEBS let.* 66:215-220.

Ben-Sasson, S., R. Shaviv, S. Bentwich, and F. Doljanski. 1975. Osmotic behavior of normal and leukemic lymphocytes. *Blood* 46:891-899.

Braun, J., and E.R. Unanue. 1983. The lymphocyte cytoskeleton and its control of surface receptor functions. *Sem. Hemat.* 20:322-333.

Britch, M., and T.D. Allen. 1981. The effects of cytochalasin B on the cytoplasmic contractile network revealed by whole-cell transmission electron microscopy. *Exp. Cell Res.* 131:161-172.

Bruning, J.W., M.J. Kardol, and R. Arentzen. 1980. Carboxyfluorescein fluorochromasia assays. I. Non-radioactively labeled cell mediated lympholysis. *J. Immunol. Meth.* 33:33-40.

Capco, D.G., K.M. Wan, and S. Penman. 1982. The nuclear matrix, 3D architecture and protein complement. *Cell* 29:847-858.

Cheung, K.K., Roy, S. Grinstein, and E.W. Gelfand. 1982. Volume regulation by human lymphocytes: identification of differences between the two major lymphocyte subpopulations. *J. Clin. Invest.* 70:632-638.

Cooper, J.A.. 1987. Effects of cytochalasins and phalloidin on actin. *J. Cell Biol.* 105:1473-1478.

van Dilla, M.A., P.N. Dean, O.D. Laerum, and M.R. Melamed. 1985. Flow Cytometry: Instrumentation and Data Analysis. Academic Press, London.

Dulbecco, R., and M. Vogt. 1954. Plaque formation and isolation of pure lines with poliomyelitis viruses. *J. Exp. Med.* 99:167-182.

Elson, E.L.. 1988. Cellular mechanics as an indicator of cytoskeletal structure and function. *Ann. Rev. Biophys. Biophys. Chem.* 17:397-430.

Fagraeus, A., K. Lidman, and G. Biberfeld. 1974. Reaction of human smooth muscle antibodies with human blood lymphocytes and lymphoid cell lines. *Nature* 252:246-247.

Figdor, C.G., W.S. Bont, J.E. de Vries, and W.L. van Es. 1981. Isolation of large numbers of highly purified lymphocytes and monocytes with a modified centrifugal elutriation technique. *J. Immunol. Meth.* 40:275-288.

Fung, Y.C.. 1965. Foundations of solid mechanics. Prentice-Hall inc., Engelwood Cliffs, New Jersey.

Gelfand, E.W., R.K.K. Cheung, K. Ha, and S. Grinstein. 1984. Volume regulation in lymphoid leukemia cells and assignment of cell lineage. *N. Eng. J. Med.* 311:939-944.

Godette, D.W., and C. Frieden. 1986. Actin Polymerization, the mechanism of action of cytochalasin D. *J. Biol. Chem.* 261:15974-15980.

Grattarola, M., P. Carlo, G. Giannetti, R. Finollo, R. Viviani, and A. Chiabrera. 1985. Laser flow measurement of scattering and fluorescence from cell nuclei in the prescence of increasing Mg++ concentrations. *Biophys. J.* 47:461-468.

Griffith, L.M., and T.D. Pollard. 1978. Evidence for actin filaments-microtubule interaction mediated by microtubule-associated proteins. *J. Cell Biol.* 78:958-965.

Grover, N.B., J. Naaman, S. Ben-Sasson, and F. Doljanski. 1969. Electrical sizing of particles in suspensions I. theory. *Biophys. J.* 9:1398-1414.

Hempling, H.G.. 1974. Permeability of the human leukocyte and leukemic cell to water. *South. Med. J.* 67:951-958.

Hempling, H.G.. 1977. The permeability of the lymphocyte membrane: applying a particle size analyzer and a hybrid computer to measure rapid changes in cell volume. *Acta Cytologica* 21:96-100.

Hoessli, D., E. Rungger-Brändle, B.M. Jockusch, and G. Gabiani. 1980. Lymphocyte alfa-actinin, relationship to cell membrane and co-capping with surface receptors. *J. Cell Biol.* 84:305-314.

Lamb, H.. 1965. Hydrodynamics. Dover Press, London.

Manning, G.. 1978. The molecular theory of polyelectrolyte solutions with applications to the electrostatic properties of polynucleotides. *Quart. Rev. Biophys.* 11:179-246.

McGann, L.E., M.L. Walterson, and L.M. Hogg. 1988. Light scattering and cell volumes in osmotically stressed frozen-thawed cells. *Cytometry* 9:33-38.

Newport, J.W., and D.J. Forbes. 1987. The nucleus: structure, function, and dynamics. *Ann. Rev. Biochem.* 56:535-565.

Nossal, R.. 1988. On the elasticity of cytoskeletal networks. *Biophys. J.* 53:349-359.

Ørskov, S.L.. 1935. Eine Methode fortlaufenden photographischen Aufzeichnung von Volumenänderungen der roten Blutkörperchen. *Biochem. Z.* 279:241-249.

de Petris, S.. 1975. Concavalin A receptors, immunoglobulins, and theta antigen of the lymphocyte surface. Interactions with Concavalin A and with cytoplasmic structures. *J. Cell Biol.* 65:123-146.

Roodyn, D.B.: Some methods for the isolation of nuclei from mammalian cells. In: Subcellular components preparation and fractionation, G.B. Birnie, and S.M. Fox (eds). Butterworths, London, 1969, pp 15-42.

Schliwa, M., and J. van Blerkom. 1981. Structural interaction of cytoskeletal components. *J. Cell Biol.* 90:222-235.

Schliwa, M.. 1982. Action of cytochalasin D on cytoskeletal networks. *J. Cell Biol.* 92:79-91.

Schmid-Schönbein, G.W., Y.Y. Shih, and S. Chien. 1980. Morphometry of human leukocytes. *Blood* 56:866-875.

Schmid-Schönbein, G.W., P.K.L. Sung, H. Tözeren, R. Skalak, and S. Chien. 1981. Passive mechanical properties of human leukocytes. *Biophys. J.* 36:234-256.

Segel, G.B., G.R. Cokelet, and M.A. Lichtman. 1981. The measurement of lymphocyte volume: importance of reference particle deformability and counting solution tonicity. *Blood* 57:894-899.

Sloot, P.M.A., and C.G. Figdor. 1986. Elastic light scattering from leukocytes: rapid numerical analysis. *Applied Optics* 25:3559-3565.

Sloot, P.M.A., M.J. Carels, P. Tensen, and C.G. Figdor. 1987. Computer assisted centrifugal elutriation I. detection system and data acquisition equipment. *Comp. Meth. Prog. Biomed.* 24:179-188.

Sloot, P.M.A., A.G. Hoekstra, and C.G. Figdor. 1988. Osmotic response of lymphocytes measured by means of forward light scattering: theoretical considerations. *Cytometry* 9:636-641.

Sundqvist, K.G., P. Otteskog, L. Wanger, R. Thorstensson, and G. Utter 1980. Morphology and microfilament organization in human blood lymphocytes. *Exp. Cell Res.* 130:327-337.

Sung, K.L.P., C. Dong, G.W. Schmid-Schönbein, S. Chien, and R. Skalak. 1988. Leukocyte relaxation properties. *Biophys. J.* 54:331-336.

Tadanao, I., K.S. Zaner, and T.P. Stossel. 1987. Nonideality of volume flows and phase transitions fo F-actin solutions in response to osmotic stress. *Biophys. J.* 51:745-753.

Yahara, I., and G.M. Edelman. 1975. Electron microscopic analysis of the modulation of lymphocyte receptor mobility. *Exp. Cell Res.* 91:125-142.

**Appendix A** Fitting of the data to an extended standard solid viscoelastic model

The relaxation of leukocytes after small deformations can be modeled by the standard solid viscoelastic model (see Fig. A1). The exact 3-dimensional solution of this model for isotropic, homogeneous spheres is given by Lamb (Lamb, 1965). This 'Lamb model' was applied to describe the retardation of leukocytes after a specific load history (Schmid-Schönbein, Sung, Tözeren, Skalak and Chien, 1981; Sung, Dong, Schmid-Schönbein, Chien and Skalak, 1988).

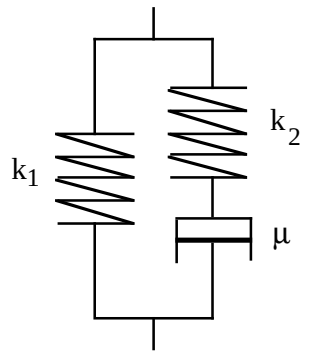


FIGURE A1: The standard solid viscoelastic model; $k_1$ and $k_2$ are resistive elements and $\mu$ is a capacitative element.

We have extended this model with a Voigt element to describe the retardation of the nucleus, see Fig. A2. Systems with resistive and capacitative elements in them may be fitted by a variety of models. Our model is a direct extension of the standard model, that allows for a retardation of the nuclear volume and preserves the total volume relaxation and retardation properties of the standard model.

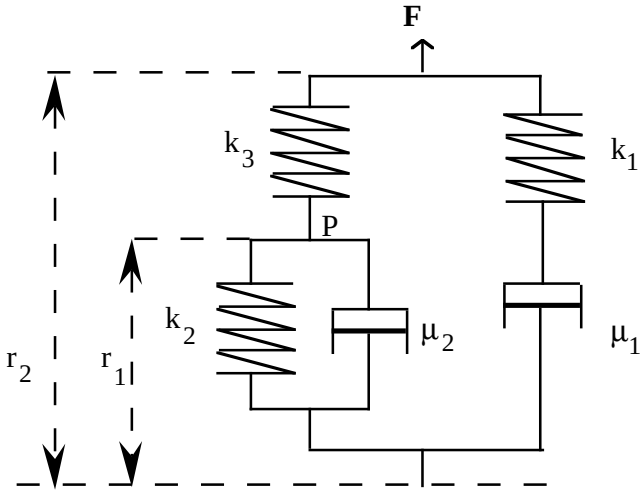


FIGURE A2: The extended standard solid viscoelastic model; $r_1$ models the nuclear volume and $r_2$ the total cell volume; $k_i$ are resistive elements and $\mu_i$ are capacitative elements.

Here, $r_1$ mimics the nuclear volume and $r_2$ the total cell volume, F is a force (the osmotic pressure) to which $r_1$ and $r_2$ respond. The response in $r_1$ and $r_2$, due to a change in F, can be calculated from the model in Fig. A2. We shall take a different approach, compatible with the idea that the nuclear volume response is induced by the total cell volume response. At time t = 0 F changes instantaneously to another constant value (step function in F). This results in a change of $r_2$ which then induces a change in $r_1$. We shall calculate the response $r_1(t)$ as a function of the stimulus $r_2(t)$.

Considering equilibrium of forces at point P in Fig. A2:

$$k_3 (r_2 - r_1) = k_2 r_1 + \mu_2 \frac{dr_1}{dt} , \qquad \text{(A1)}$$

and taking the Laplace transform of the resulting differential equation, one finds for $R_1(p)$ and $R_2(p)$, the Laplace transforms of $r_1(t)$ and $r_2(t)$,

$$\frac{R_1(p)}{R_2(p)} = K \frac{1}{1 + p\tau} , \qquad \text{(A2)}$$

with $K = \frac{k_3}{k_2 + k_3}$ and $\tau = \frac{\mu_2}{k_2 + k_3}$ .

J(p), the Laplace transform of the step response function J(t), is (Fung, 1965):

$$J(p) = \frac{R_1(p)}{pR_2(p)} \quad . \qquad \text{(A3)}$$

Inverse Laplace transformation gives

$$J(t) = K(1 - e^{-t/\tau})H(t), \qquad \text{(A4)}$$

with H(t) the Heaviside step function. The corresponding response $r_1(t)$ is

$$r_1(t) = \int_{-\infty}^{\infty} r_2(t')\dot{J}(t-t')dt' \quad , \qquad \text{(A5)}$$

with $\dot{J}(t) = \frac{dJ(t)}{dt}$ .

The response of a lymphocyte to aniosmotic conditions is isotropic, therefore it is assumed that a one-dimensional model is sufficient to describe the deformation (i.e. the volume changes). In analogy with Fig. (A2) and equations A2 - A5, the nuclear volume response is described with one retardation time and it is assumed that K = 1:

$$[(\frac{V(t)}{V(0)})_N - 1] = \int_{-\infty}^{\infty} [(\frac{V(t')}{V(0)})_{cell} - 1]\dot{J}_N(t-t')dt' \qquad \text{(A6)}$$

and

$$J_N(t) = (1 - e^{-t/\tau}) \quad . \qquad \text{(A7)}$$

Since K = 1, $V_N/V_{cell}$ is constant for t -> ∞, independent of the osmolarity of the solution, in agreement with Sloot et al. (Sloot, Hoekstra and Figdor, 1988). This volume ratio is approximately 0.5 (Sloot and Figdor, 1986; Elson, 1988; Schmid-Schönbein, Shih and Chien, 1980).

If $[V(t)/V(0)]_{cell}$ is accurately known, $[V(t)/V(0)_{]N}$ can be calculated from Eq. A6 and fitted to the measured data. However, from Fig. 3 it is obvious that the time step between two subsequent measurements of $[V(t)/V(0)]_{cell}$ is too large to allow for accurate numeric evaluation of Eq. A6. Therefore the total cell volume response is approximated by an analytical expression and the integral A6 can then be evaluated. Only the response in hypoosmotic $Na^+$ medium is further analyzed.

Dividing the total cell volume response in two phases we obtain (see Fig. A3):

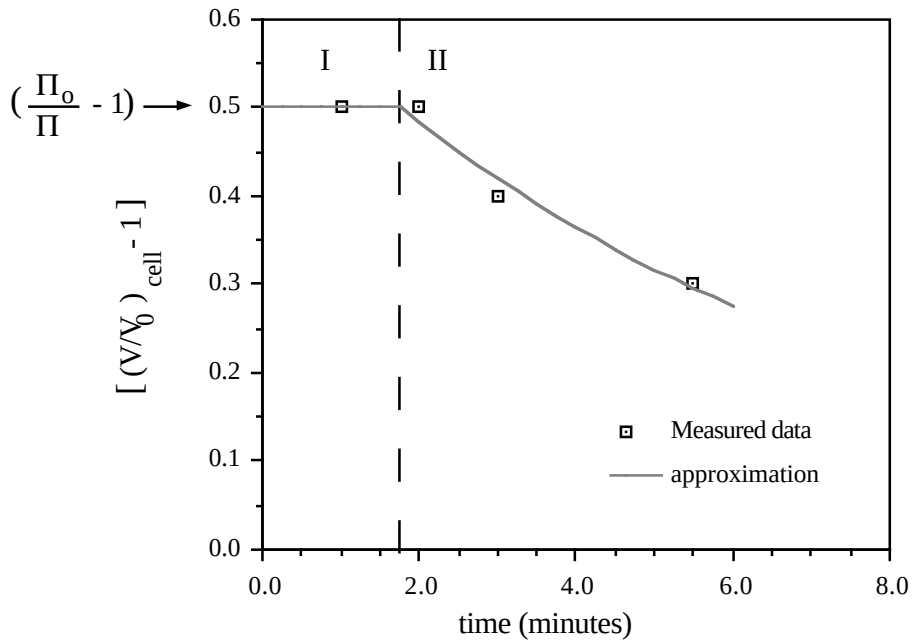


FIGURE A3: The total cell volume response for the hypoosmotic $Na^+$ medium and the approximation of this response. Phase I is a Heaviside step function; phase II is an exponential decay.

phase I: The fast initial response is approximated by $(\Pi_0/\Pi-1)H(t)$, where it is assumed that the fast increase in volume is described by the Boyle van 't Hoff relation, with the volume of the "dry mass" (the b value) set to zero (Sloot, Hoekstra and Figdor, 1988).

phase II: The volume regulatory phase is approximated by an exponential decay:

$$\left(\frac{\Pi_0}{\Pi} - 1\right)e^{-(t-t_1)/\tau_c} \cdot H(t-t_1),$$

with $t_1$ = 1.8 minutes and $\tau_c$ = 7.1 minutes.

Substituting this approximation of $[V(t)/V(0)]_{cell}$ in equation A6 gives:

$$\left[\left(\frac{V(t)}{V(0)}\right)_N - 1\right] = \begin{cases} \left(\frac{\Pi_0}{\Pi} - 1\right)(1 - e^{-t/\tau}) \text{ for } 0 < t < t_1 \text{, and} & \text{(A8.1)} \\ \left(\frac{\Pi_0}{\Pi} - 1\right)\left[ e^{-(t-t_1)/\tau} - e^{-t/\tau} + \frac{\tau_c}{\tau_c - \tau}\left(e^{-(t-t_1)/\tau_c} - e^{-(t-t_1)/\tau}\right)\right], & \text{(A8.2)} \end{cases}$$

for $t > t_1$.

The measured $[(V(t)/V(0))_N - 1]$ data for $0 < t < t_1$ (see Fig. 3c) are fitted with a least squares method to equation A8.1, yielding $\tau$ = 1.0 minute. With known values for $\tau$, $\tau_c$ and $t_1$, the response for $t > t_1$ can be calculated from equation A8.2. The result of the fit for $t < t_1$ and the calculations for $t > t_1$ are depicted in Fig. A4.

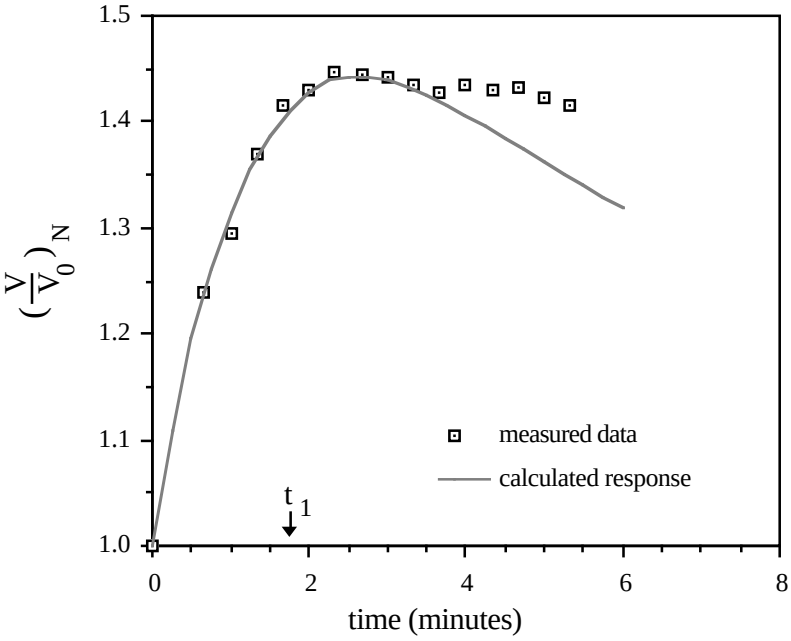


FIGURE A4: The measured nuclear volume response in hypoosmotic $Na^+$ medium and the fitted response; $t_1$=1.75 minute, $\tau_c$=7.1 minute and $\tau$=1.0 minute.