Downloaded from UvA-DARE, the institutional repository of the University of Amsterdam (UvA)
http://hdl.handle.net/11245/2.105925

File ID	uvapub:105925
Filename	Jones-2011JCPP.pdf
Version	unknown

SOURCE (OR PART OF THE FOLLOWING SOURCE):

Type	article
Title	A multimodal approach to emotion recognition ability in autism spectrum disorders
Author(s)	C.R.G. Jones, A. Pickles, M. Falcaro, A.J.S. Marsden, F. Happé, S.K. Scott, D. Sauter, J. Tregay, R.J. Phillips, G. Baird, E. Simonoff, T. Charman
Faculty	Other than UvA, FMG: Psychology Research Institute
Year	2011

FULL BIBLIOGRAPHIC DETAILS:
http://hdl.handle.net/11245/1.369933

Copyright

It is not permitted to download or to forward/distribute the text or part of it without the consent of the author(s) and/or copyright holder(s), other than for strictly personal, individual use, unless the work is under an open content licence (like Creative Commons).

UvA-DARE is a service provided by the library of the University of Amsterdam (http://dare.uva.nl)
(pagedate: 2015-09-28)

THE JOURNAL OF CHILD PSYCHOLOGY AND PSYCHIATRY

Journal of Child Psychology and Psychiatry 52:3 (2011), pp 275–285 doi:10.1111/j.1469-7610.2010.02328.x

A multimodal approach to emotion recognition ability in autism spectrum disorders

Catherine R.G. Jones,[1] Andrew Pickles,[2] Milena Falcaro,[2] Anita J.S. Marsden,[3] Francesca Happé,[4] Sophie K. Scott,[5] Disa Sauter,[5] Jenifer Tregay,[3] Rebecca J. Phillips,[3] Gillian Baird,[6] Emily Simonoff,[7] and Tony Charman[1]

[1]Centre for Research in Autism and Education, Department of Psychology and Human Development, Institute of Education, London, UK; [2]Biostatistics Group, School of Community-Based Medicine, University of Manchester, UK; [3]UCL Institute of Child Health, London, UK; [4]MRC SDGP Research Centre, Institute of Psychiatry, King's College London, UK; [5]UCL Institute of Cognitive Neuroscience, London, UK; [6]Guy's & St Thomas' NHS Foundation Trust, London, UK; [7]Department of Child and Adolescent Psychiatry, King's College London, Institute of Psychiatry, UK

Background: Autism spectrum disorders (ASD) are characterised by social and communication difficulties in day-to-day life, including problems in recognising emotions. However, experimental investigations of emotion recognition ability in ASD have been equivocal, hampered by small sample sizes, narrow IQ range and over-focus on the visual modality. **Methods:** We tested 99 adolescents (mean age 15;6 years, mean IQ 85) with an ASD and 57 adolescents without an ASD (mean age 15;6 years, mean IQ 88) on a facial emotion recognition task and two vocal emotion recognition tasks (one verbal; one non-verbal). Recognition of happiness, sadness, fear, anger, surprise and disgust were tested. Using structural equation modelling, we conceptualised emotion recognition ability as a multimodal construct, measured by the three tasks. We examined how the mean levels of recognition of the six emotions differed by group (ASD vs. non-ASD) and IQ (≥ 80 vs. < 80). **Results:** We found no evidence of a fundamental emotion recognition deficit in the ASD group and analysis of error patterns suggested that the ASD group were vulnerable to the same pattern of confusions between emotions as the non-ASD group. However, recognition ability was significantly impaired in the ASD group for surprise. IQ had a strong and significant effect on performance for the recognition of all six emotions, with higher IQ adolescents outperforming lower IQ adolescents. **Conclusions:** The findings do not suggest a fundamental difficulty with the recognition of basic emotions in adolescents with ASD. **Keywords:** Autism spectrum disorder, emotion recognition, emotion processing, social communication, structural equation modelling.

Autism spectrum disorders (ASDs), the common clinical term for the pervasive developmental disorders (American Psychiatric Association, 2000; World Health Organisation, 1993), are defined by social and communication difficulties, and deficits related to emotional processing are seen as a hallmark symptom. Basic emotion recognition is a fundamental 'building block' of more sophisticated emotional and social understanding and establishing the degree of deficit in ASD is important for ascertaining at what level social-emotional understanding begins to break down for these individuals.

The most widely used emotion recognition task requires identification of the emotional state of faces in a forced-choice paradigm, with the participant being tested on a selection from the six 'basic' emotions of happiness, sadness, fear, anger, surprise and disgust (Ekman & Friesen, 1976). Some studies report significantly poorer performance in ASD for either total score or individual emotions (e.g., Ashwin, Chapman, Colle, & Baron-Cohen, 2006; Baron-Cohen, Spitz, & Cross, 1993; Boraston, Blakemore, Chilvers, & Skuse, 2007; Corden, Chilvers, & Skuse, 2008; Pelphrey et al., 2002; Philip et al., in press; Wallace, Coleman, & Bailey, 2008; Wright et al., 2008) but others have found no difference between the ASD and comparison groups (e.g., Castelli, 2005; Grossman, Klin, Carter, & Volkmar, 2000). For those studies that do find a difference, the specific emotions that are problematic vary, with each of the core emotions except for happiness being identified in at least one study but with sadness and fear being the most commonly cited (Ashwin et al., 2006; Boraston et al., 2007; Corden et al., 2008; Pelphrey et al., 2002; Philip et al., in press; Wallace et al., 2008). One explanation for the inconsistent findings is likely to be sample size, with the studies cited here including between 11 and 39 participants with ASD. In addition, small sample sizes limit exploration of the effect of IQ on performance and many previous studies include exclusively high or low IQ participants.

Research into emotion recognition ability in ASD has also been limited by over-focus on the visual modality, specifically the recognition of emotion in faces. Understanding emotional states in real life involves reading a variety of cues that include tone of voice, non-verbal vocalisations, vocal content, ges-

Conflict of interest statement: No conflicts declared.

© 2010 The Authors. Journal of Child Psychology and Psychiatry
© 2010 Association for Child and Adolescent Mental Health.
Published by Blackwell Publishing, 9600 Garsington Road, Oxford OX4 2DQ, UK and 350 Main St, Malden, MA 02148, USA

tures and posture. Recognising emotion from human vocalisations is the auditory equivalent of facial emotion recognition. Four studies have recently investigated the recognition of emotion in spoken sentences with neutral verbal content (excluding tasks with relevant verbal content, which provide additional emotional semantic cues), with three finding evidence of a deficit in children or adults with ASD (Lindner & Rosén, 2006; Mazefsky & Oswald, 2007; Philip et al., in press) and one finding no difference in adults with Asperger's syndrome (O'Connor, 2007). However, only one (Philip et al., in press) tested the full range of the six 'basic' emotions, and not all used comparison groups that were fully matched for IQ. Vocal emotion recognition can also be assessed by using non-verbal sounds, i.e., vocal expressions of emotion that do not involve speech (laughter, crying, gasps, etc.), and which are used expressly to communicate emotional state. Using a paradigm pioneered by Hobson (1986), studies of non-verbal emotion recognition in ASD report both impairment (Hobson, 1986; Hobson, Ouston, & Lee, 1988) and intact ability (Ozonoff et al., 1990; Prior et al., 1990). However, the paradigm uses cross-modal matching (i.e., pairing emotional voices with emotional faces); we are not aware of any studies that have used the more straightforward emotion-word matching paradigm to assess non-verbal vocal emotion recognition in ASD.

Evidence suggests that emotion recognition in different domains is underpinned by a multimodal emotion processing ability (e.g., Borod et al., 2000; Scott et al., 1997). However, current research into emotion recognition ability in ASD investigates visual or vocal emotion recognition ability discretely. In the current study we tested both visual (facial) and auditory (verbal and non-verbal vocalisations) emotion recognition in adolescents with ASD compared to age- and IQ-matched controls, including both high and low IQ participants. A structural equation modelling (SEM) approach allowed us to model 'emotion recognition ability' for each emotion as a composite trait, measured by the three tasks. This approach enables us to encapsulate emotion recognition ability as a multimodal construct, which we argue better illustrates competence in recognising emotion than focusing on one modality.

Method

Participants

Ninety-nine adolescents with an ASD (mean age = 15 years 6 months (SD 5.6 months)) and 57 adolescents without an ASD (mean age = 15;6 (SD 5.9)) were tested. The 99 participants with an ASD (53 childhood autism; 46 other ASD) and 26 of the participants without an ASD were recruited from the population-derived Special Needs and Autism Project cohort (SNAP; Baird et al., 2006). For this cohort, consensus clinical ICD-10 diagnoses were made using information from the ADI-R (Lord, Rutter, & Le Couteur, 1994) and ADOS-G (Lord et al., 2000) as well as IQ, language and adaptive behaviour measures (see Baird et al., 2006; for details). The 26 participants assigned to the non-ASD group were adolescents who did not reach clinical criteria for an ASD (Baird et al., 2006). Rather, they had a range of primary ICD-10 diagnoses (16 mild mental retardation; 3 moderate mental retardation; 3 specific reading/spelling disorder; 2 AD/HD; 1 expressive/receptive language disorder; 1 no diagnosis). The remaining non-ASD participants (n = 31) were recruited from local mainstream schools. Parent and teacher report confirmed that all were typically developing; none had a psychiatric or developmental diagnosis, a statement of special educational needs or were receiving medication. The Social Communication Questionnaire (SCQ; Rutter, Bailey, & Lord, 2003) was collected from parents of 25 of the 31 adolescents; no individual scored 15 or above, which is the cut-off for ASD. Measures of IQ were obtained using the Wechsler Abbreviated Scale of Intelligence (WASI^{UK}; Wechsler, 1999) with the full-scale IQ of the total cohort ranging from 50 to 133. To explore the effects of IQ on performance, the participants were split into low IQ (full-scale IQ < 80) and high IQ (full scale IQ ≥ 80) subgroups. There was a significant difference in IQ between the high IQ subgroups with and without ASD, with a mean full-scale IQ of 104.0 (SD = 11.8) in the non-ASD group and 96.9 (SD = 10.0) in the ASD group ($t(91) = 3.07$; $p < .01$). Achieving balance through pairwise and group-wise matching would have lost participants and thus power. Instead, we matched the distributions by weighting the ASD subjects (formally by the ratio of the non-ASD to ASD kernel density estimates of the within-group IQ distributions) and undertaking a weighted analysis in Mplus (Muthén & Muthén, 1998–2007). While it is not possible to use standard likelihood ratio tests with weighted data, testing using appropriate Wald tests remains straightforward. All estimates, confidence intervals and test statistics reported took account of this weighting. Following the weighting procedure, there were no group differences between the ASD and non-ASD participants for age or IQ (t-test, all $p > .10$); see Table 1).

The study was approved by the South East Research Ethics Committee (05/MRE01/67) and informed consent was obtained from all participants.

Tasks

All tasks were programmed in Matlab v6.5 (Mathworks Inc., Sherbon, MA) using Cogent 2000 (Wellcome Department of Imaging Neuroscience, UCL Institute of Neurology, London, UK; http://vislab.ucl.ac.uk/Cogent/) and presented on a Hewlett-Packard laptop computer with a 15" LCD display screen. For the verbal tasks, stimuli were delivered binaurally through headphones (Sennheiser HD 280 pro).

Emotion recognition from facial cues. Facial expressions of emotion task (FE). This task used faces from the Ekman–Friesen test of affect recognition (Ekman & Friesen, 1976). The stimuli (.jpg files) were black and white halftone photographs of male and female faces expressing one of six 'basic' emotions

© 2010 The Authors
Journal of Child Psychology and Psychiatry © 2010 Association for Child and Adolescent Mental Health.

Table 1 Mean age, verbal IQ, performance IQ and full-scale IQ (SD in brackets) for the non-ASD and ASD groups. The recalculated weighted mean IQ for the ASD groups (ASD-WT) is also shown. Data for all cases, low IQ (FSIQ < 80) and high IQ (FSIQ ≥ 80) shown separately

		n	M:F	Age	VIQ	PIQ	FSIQ
All	Non-ASD	57	54:3	15;6 (5.9)	86.3 (20.2)	91.5 (21.7)	88.0 (22.2)
	ASD	99	90:9	15;6 (5.6)	81.1 (17.9)	90.6 (18.6)	84.6 (18.0)
Low IQ	Non-ASD	23	20:3	15;5 (4.1)	65.8 (8.6)	68.5 (9.5)	64.5 (8.4)
	ASD	40	35:5	15;6 (5.0)	64.7 (9.9)	73.1 (13.5)	66.4 (9.5)
	ASD-WT				63.2	70.6	64.3
High IQ	Non-ASD	34	34:0	15;7 (6.9)	100.1 (12.5)	107.1 (11.0)	104.0 (11.8)
	ASD	59	55:4	15;6 (6.0)	92.2 (12.9)	102.4 (10.4)	96.9 (10.0)
	ASD-WT				96.3	104.8	100.6

(happiness, sadness, anger, fear, surprise, disgust). Each stimulus was displayed on the screen until the participant's response had been input by the examiner. A total of 60 faces were presented, 10 of each emotion, in the same order as the original Ekman–Friesen test.

Emotion recognition from vocal cues. These tasks used stimuli designed by SS and DS (Sauter, 2006; Sauter, Calder, Eisner, & Scott, in press). The stimuli have been validated in typical adults (Sauter et al., in press) as well as used in previous studies (Garrido et al., 2009; Sauter & Scott, 2007).

(i) *Verbal vocal expressions of emotion task (V-VE).* The stimuli (.wav files) were vocal recordings of four actors (2 male; 2 female) expressing one of the six basic emotions verbally. The verbal content was three-digit numbers (e.g., 'one-hundred and thirty-seven', 'five-hundred and forty-five'). Stimulus length was on average 1.84 s (SD .46 s). A total of 30 stimuli were presented, 5 of each emotion, in one of six pseudo-randomised orders.

(ii) *Non-verbal vocal expressions of emotion task (NV-VE).* The stimuli (.wav files) were vocal recordings of four actors (2 male; 2 female) expressing one of the six basic emotions non-verbally. Examples of the non-verbal stimuli include crying vocalisations for sadness and laughing vocalisations for happiness. Stimulus length was on average 1.01 s (SD .52 s). A total of 30 stimuli were presented, 5 of each emotion, in one of six pseudo-randomised orders.

For all tasks, the inter-response interval was 1000 ms.

Design and procedure

Each participant completed the tasks in a random order over two days of testing (interspersed with other tasks). The lag between the two testing sessions averaged at 29 days (SD: 36 days). The laptop was placed directly in front of the participants, who were seated at a desk. A laminated A4 response sheet was placed on the desk between the participant and the laptop. The sheet was divided into a 3 × 2 grid, with each grid square containing one of the response options ('Happiness', 'Sadness', 'Anger', Fear', 'Surprise', 'Disgust').

Before the task began the participant was asked to read the six emotions aloud. If a participant struggled to read the emotions then cartoon drawings of the emotions were added to the response sheet and the examiner reiterated the six response options on each trial as necessary. For each task, participants were told that they were going to see some faces/hear some voices. They were instructed to 'decide how the person is feeling' and to choose the word from the response sheet that 'best describes how that person is feeling'. Participants were allowed to give their answer verbally or point to the word, and the examiner would then input the response using one of six labelled keys on the keyboard. The FE task also included six practice trials prior to the task, to ensure that the task was understood.

Structural equation modelling. Data were analysed using structural equation modelling in MPlus 5.2. With 18 different measures a method for dealing with the problems of multiple testing was essential. Since the tasks involved six emotions and three modalities we made use of structural equation models that recognised our theory and design and postulated a more parsimonious set of latent traits that allowed for correlated measurement error. We considered that the tasks measured six (correlated) emotion-specific recognition abilities (latent traits) for each participant. The participant characteristics of diagnosis and IQ group were allowed to influence item responses only through mean differences in these six traits (the reference category of participants being set to mean zero on each trait with all item thresholds freely estimated and thus able to vary in difficulty). We also considered a model with just a single general emotion recognition factor (i.e., encompassing all emotion conditions); this offers a more powerful test of group differences in gross recognition ability in circumstances where emotion-specific traits are highly correlated.

Since the tasks were of distinct types, notably distinguished by stimulus modality, we also expected correlation in ability by modality. We therefore considered two models. The first, a correlated trait-correlated uniqueness model (CTCU; see Marsh, 1989), modelled the six emotion-specific recognition abilities (traits), as outlined above, and allowed 15 free correlations among the responses within each of the three modalities (see Figure 3).The second, a multitrait-multimethod structure model (MTMM; see, e.g., Campbell & Fiske, 1959, and Loehlin, 2004), was more restrictive in postulating that a participant's expected performance on a task was the sum of an emotion-specific ability (trait) and a stimulus modality-specific (method) ability. Both trait and stimulus modality factors can be linked to

© 2010 The Authors
Journal of Child Psychology and Psychiatry © 2010 Association for Child and Adolescent Mental Health.

explanatory variables. The MTMM model with positive method factor loadings assumes consistency of differences across modalities, such that if one emotion is easier under one modality then all emotions should be. This offered a framework within which systematic differences across groups by modality (e.g., the ASD group being better with an auditory stimulus) could be tested. However, empirical applications of the MTMM model often fail to converge, or converge on improper solutions (Marsh, 1989).

Since the scores on each task were ordinal and on some tasks some participants performed at or close to ceiling, the analysis used WLSMV (weighted least squares mean and variance adjusted) in Mplus. Reasonable fitting models give Comparative Fit Index (CFI) values of .95 or larger and Root Mean Square Errors (RMSE) of .08 or less. The WLSMV estimator precludes the use of the standard likelihood ratio comparison of models. Instead, models are compared by means of adjusted Wald tests.

SEM-based findings were supported by single and multivariable regression analyses of total and subtotal scores, the latter estimated using a generalized estimating equation (GEE) with an unstructured covariance matrix estimated in Stata 11 (StataCorp, 2009).

Results

Emotion recognition abilities in ASD vs. non-ASD participants

The mean emotion recognition scores for the three tasks are shown in Figure 1, plotted as a diagnostic group comparison, and in Figure 2, plotted as an IQ group comparison. For technical reasons or time constraints, 4 participants were not administered the FE task, 4 were not administered the V-VE task, and 3 were not administered the NV-VE task. All participants completed at least one task, so no participants have been excluded from the illustrative tables and figures or the SEM models.

Data from the tasks were ordinal and censored; no simple transformation yielded single task scores suitable for continuous variable methods.

MTMM model. Regardless of parameterisation (Marsh, 1989) this model failed to give a positive definitive residual covariance matrix and thus did not provide a model suitable as a basis for inferring group differences. Although more complex method effects are possible, simple additive method components of variance would be expected to result in positively correlated residual errors. Contrary to this expectation, the free correlations estimated among the 45 within-method measurement errors from the CTCU models (described in the next section) were generally small, ranging from –.37 (FE happy with disgust) to .45 (V-VE anger with disgust) with averages of .019 for FE, .113 for V-VE and .053 for NV-VE. Multivariable regression analysis

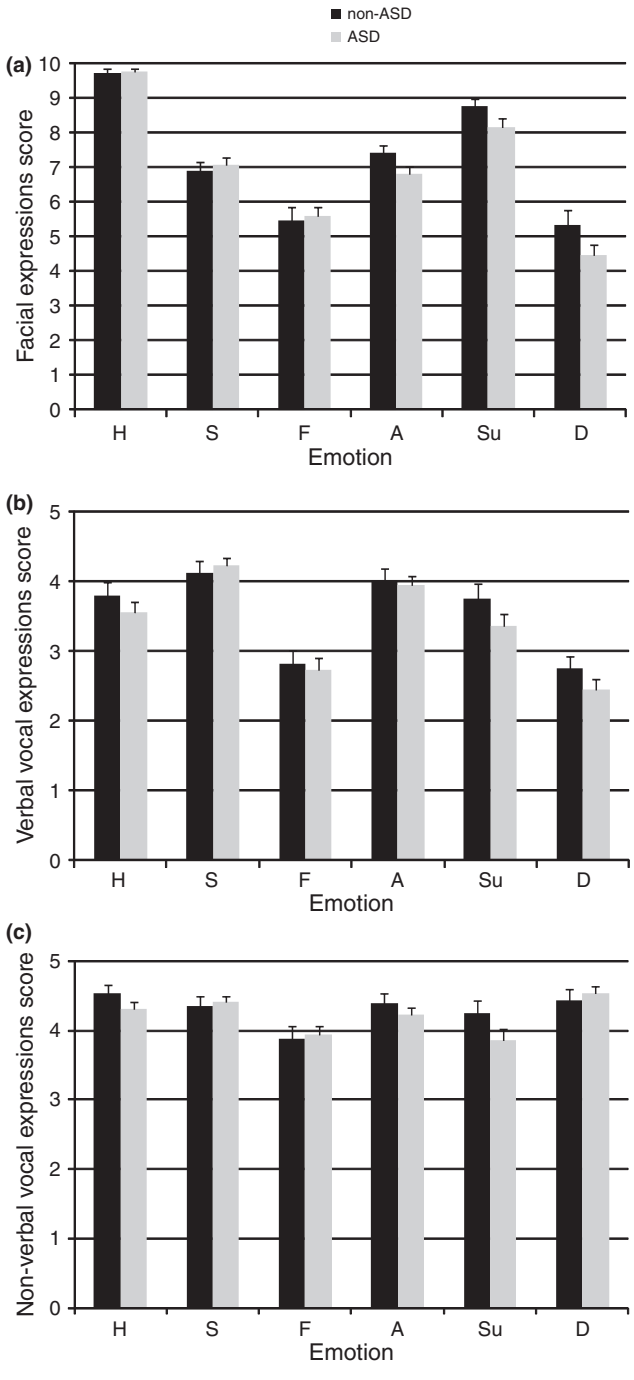

Figure 1 Mean scores for each emotion on the three tasks (± SE) compared by diagnostic group: (a) Facial expressions (FE) (b) Verbal vocal expressions (V-VE) (c) Non-verbal vocal expressions (NV-VE) H = Happy; S = Sad; F = Fear; A = Anger; Su = Surprise; D = Disgust

(using GEE) of the three total scores, obtained from summing across the six emotions within each method, gave no evidence for differences in performance either for diagnosis by IQ interaction (Adjusted Wald $\chi^2(3) = 4.05$, $p = .26$)) or for diagnostic group (Adjusted Wald $\chi^2(3) = 2.85$, $p = .42$ from a model without the diagnosis by IQ interaction). We therefore focused upon the traits (see below), treating the correlations of shared method effects as a nuisance.

© 2010 The Authors
Journal of Child Psychology and Psychiatry © 2010 Association for Child and Adolescent Mental Health.

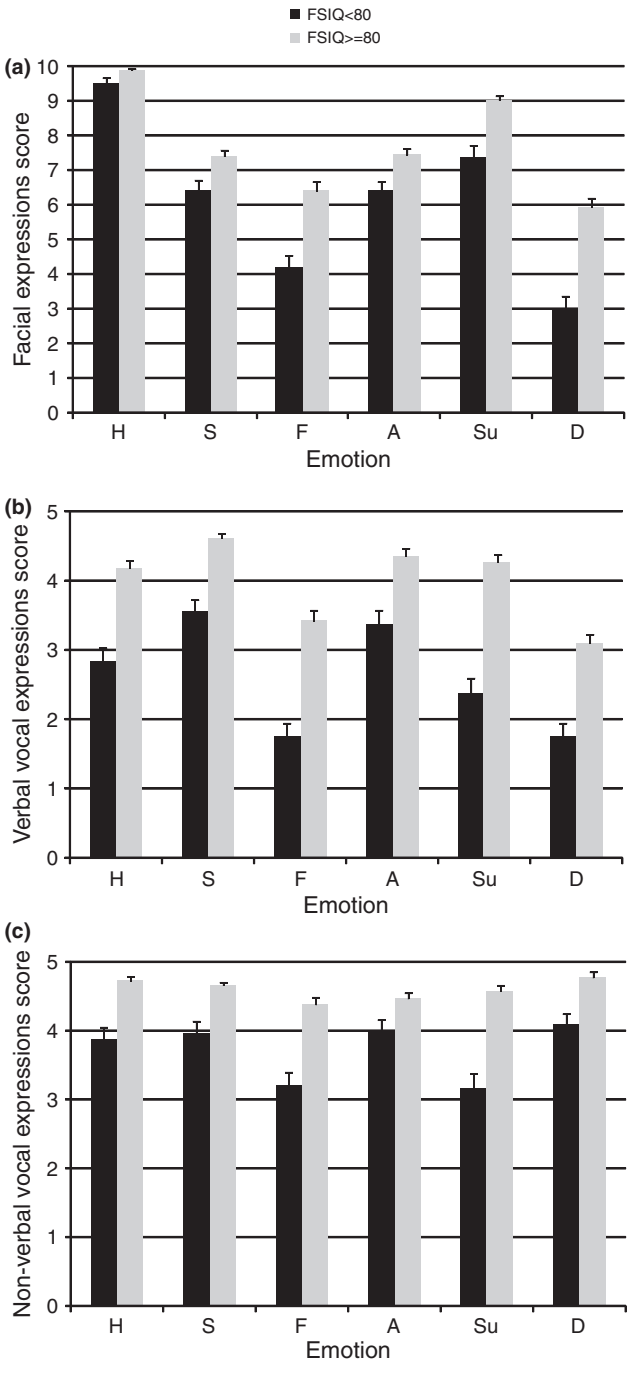

Figure 2 Mean scores for each emotion on the three tasks (± SE) compared by IQ group: (a) Facial expressions (FE) (b) Verbal vocal expressions (V-VE) (c) Non-verbal vocal expressions (NV-VE) H = Happy; S = Sad; F = Fear; A = Anger; Su = Surprise; D = Disgust

CTCU model. Figure 3 shows parameter estimates from the CTCU model. As is often the case (see Brown, 2006), although the χ^2 test of model fit indicated imperfect fit ($\chi^2(37) = 65.17$, $p = .003$), both the CFI (.96) and the RMSE (.07) criteria suggested the fit to be satisfactory. As expected and shown on the figure, the standardized loadings for each latent emotion recognition trait factor were all positive. The trait factors explained on average half of the task score variance (ranging between 18% for non-verbal anger and 74% for verbal surprise).

Extending the model to regress the emotion recognition trait factors on the participant groups (IQ, diagnosis and their interaction) showed no significant effect for the interaction (diagnosis by IQ) either individually (1df Wald test p-values: happy .30, sad .16, fear .48, anger .53, surprise .75 and disgust .61) or altogether (adjusted Wald χ^2 (6) = 2.75, $p = .84$) (Model χ^2 (46) = 62.05, $p = .06$; CFI = .96; RMSE = .047). The conventional statistical approach is to find the most parsimonious model, so the model was refitted without the interaction. This main effects only model, (Model χ^2 (49) = 74.65, $p = .01$; CFI = .95; RMSE = .058), gave the coefficient estimates shown in Table 2. Consistently significant and large effects were evident for IQ group but not for diagnosis (the group difference for surprise was significant at the nominal critical p-value of .05 but not the Bonferroni corrected value of .008). A combined Wald test for the six diagnosis group differences was not significant (χ^2 (6) = 9.93, $p = .13$). The pattern of findings was similar when IQ was modelled as a continuous variable.

The estimated correlations among the traits are shown in Table 3. The smallest of these correlations is .62, suggesting that emotion recognition ability does not have a marked specificity in this sample. We therefore also tested a model in which the six emotion factors were replaced by a single factor for all 18 tasks. As in the six-factor model, correlations among the errors for measures using the same modality were allowed. This model, (Model χ^2 (41) = 88.34, $p < .001$; CFI: .94; RMSE: .086) fitted marginally less well that the six-factor solution. Consistent with the six-factor solution model, there was no evidence for differences for diagnosis by IQ interaction ($p > .2$). Further, in the absence of the interaction (Model χ^2 (56) = 99.45, $p = .0003$; CFI: .91; RMSE: .071) there was no significant effect of diagnosis (standardized difference = −.079, SE = .063, $p = .208$) but a significant effect of IQ (standardized IQ group difference = .726; SE = .107; $p < .001$). Thus, a one-factor solution, although providing a more powerful test for gross differences by diagnosis, did not alter the pattern of findings.

We used the non-central chi-square method to estimate the power to detect a medium-size group difference of .7 SD on the means of the six latent emotion variables. This gave 67% for happy, 84% for sad, 88% for anger, 87% for fear, 83% for surprise and 77% for disgust. For the single common factor model the power was 96% to detect a group difference of .7 SD and 76% for .5 SD.

Error patterns in recognising individual emotions in ASD vs. non-ASD

Analysis of error patterns on raw percentage accuracy scores was used to determine if the ASD group were making systematic errors (i.e., confusing two emotions) not seen in the non-ASD group. The con-

© 2010 The Authors
Journal of Child Psychology and Psychiatry © 2010 Association for Child and Adolescent Mental Health.

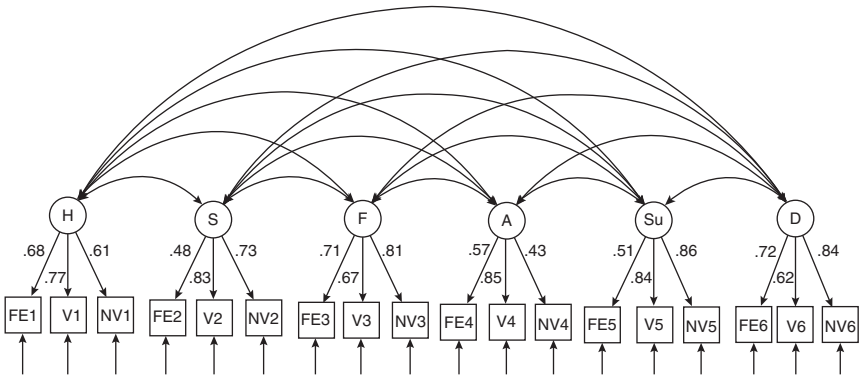

Figure 3 The six-factor emotion recognition (CTCU) model showing standardized factor loadings for the 3 modalities used for each emotion. Not shown are the correlations among the measurement errors H = Happy; S = Sad; F = Fear; A = Anger; Su = Surprise; D = Disgust; FE = Facial expressions of emotion task; V = Verbal vocal expressions of emotion task; NV = Non-verbal vocal expressions of emotion task

Table 2 Group differences (coefficient estimates) for IQ (low vs. high) and diagnosis (non-ASD vs. ASD) on the emotion-recognition traits estimated from the CTCU model with no diagnosis by IQ interaction (CI = 95% confidence interval)

	Low vs. high IQ				Non-ASD vs. ASD			
	Standardized difference*	Difference*	CI	*p*-value	Standardized difference	Difference	CI	*p*-value
Happy	.66	1.19	.72–1.7	<.001	−.13	−.23	−.68–.22	.19
Sad	.58	1.09	.61–1.6	<.001	.03	.06	−.40–.52	.74
Fear	.66	.93	.55–1.3	<.001	.02	.03	−.27–.32	.83
Anger	.54	1.04	.55–1.5	<.001	−.12	−.23	−.70–.23	.19
Surprise	.73	1.59	1.1–2.1	<.001	−.17	−.37	−.81–.07	.03
Disgust	.71	.95	.52–1.4	<.001	−.09	−.12	−.43–.18	.30

*Both estimates come from the same model: Standardized difference refers to the fully standardized coefficient for which both predictor and trait variances are scaled to 1, and Difference to the raw coefficient to which the confidence intervals apply.

Table 3 Estimated correlations among the six factors (emotion recognition traits) allowing measurement errors to be freely correlated

	Happy	Sad	Fear	Anger	Surprise
Sad	.77				
Fear	.70	.84			
Anger	.69	.65	.74		
Surprise	.86	.80	.84	.65	
Disgust	.70	.72	.88	.62	.87

fusion matrices in Table 4 show the error pattern for the ASD and non-ASD participants. The two groups showed a remarkably similar pattern of errors across the emotions, with the emotion that is most consistently confused with the target being the same for both groups. The only emotion for which this pattern was not identical was for the non-verbal recognition of surprise, where the non-ASD group confused surprise most with disgust and the ASD group confused it most with happiness.

Discussion

In an exploration of emotion recognition abilities in ASD, we investigated 99 adolescents with ASD across the IQ spectrum and examined both visual (facial) and auditory (verbal and non-verbal voices) emotion recognition. Using a structural equation modelling (SEM) approach that enabled us to treat emotion recognition ability as a multimodal construct, we found no evidence of a fundamental impairment in emotion recognition ability in adolescents with ASD.

Emotion recognition ability in ASD

The SEM approach allowed emotion recognition ability to be modelled as a multimodal construct. By taking a composite approach, we argue that our model better encapsulates the ability to recognise emotional states than the more familiar unimodal approach taken in previous studies in the ASD field. Although we were unable to estimate explicit modality factors as part of an MTMM model, no differences by diagnosis in modality-specific subtotals were found. The weakness of the method effect is congruent with the hypothesis of a general 'emotion processor' (e.g., Borod et al., 2000) and reflects data from patients with subcortical lesions who show deficits in recognising specific emotions in the face *and* voice (Calder, Keane, Manes, Antoun, & Young,

© 2010 The Authors
Journal of Child Psychology and Psychiatry © 2010 Association for Child and Adolescent Mental Health.

Table 4 a–c Confusion matrix for (a) Facial expressions, (b) Verbal vocal expressions, (c) Non-verbal vocal expressions scores for non-ASD and ASD groups. Columns show each of the six target emotions and the rows show the percentage of responses that were given for the correct answer (in bold) and the five alternative response options. The final column shows the total percentage of answers for each response option.

(a) FE	Happy	Sad	Fear	Anger	Surprise	Disgust	
Response (%)							
Non-ASD							
Happy	**97.5**	0.7	0.9	0.2	1.1	0.4	**= 16.8**
Sad	0.2	**68.9**	2.9	2.9	0.5	2.7	**= 13.0**
Fear	0.2	13.8	**54.9**	4.3	8.4	3.6	**= 14.2**
Anger	0.2	2.7	8.4	**74.4**	0.5	38.7	**= 20.8**
Surprise	2.0	4.7	27.1	4.4	**87.6**	0.9	**= 21.1**
Disgust	0.0	9.1	5.8	14.0	1.8	**53.6**	**= 14.1**
ASD							
Happy	**97.8**	1.2	3.0	1.3	1.9	0.6	**= 17.6**
Sad	0.2	**70.9**	3.4	6.1	1.6	4.5	**= 14.5**
Fear	0.2	11.3	**56.0**	4.5	12.1	2.8	**= 14.5**
Anger	0.1	4.4	7.4	**68.4**	0.6	45.8	**= 21.1**
Surprise	1.3	3.6	23.8	4.8	**81.6**	1.4	**= 19.5**
Disgust	0.3	8.5	6.4	14.8	2.1	**44.8**	**= 12.8**
(b) V-VE:	Happy	Sad	Fear	Anger	Surprise	Disgust	
Response (%)							
Non-ASD							
Happy	**76.1**	1.4	2.1	4.6	10.7	6.4	**= 16.9**
Sad	1.4	**82.5**	23.6	0.4	3.6	12.5	**= 20.7**
Fear	1.8	7.5	**56.4**	3.9	2.9	5.4	**= 13.0**
Anger	5.7	0.7	3.2	**80.4**	2.1	8.6	**= 16.8**
Surprise	10.0	2.9	10.0	3.9	**75.4**	12.1	**= 19.0**
Disgust	5.0	5.0	4.6	6.8	5.4	**55.0**	**= 13.6**
ASD							
Happy	**71.3**	2.3	6.0	7.9	19.4	10.4	**= 19.6**
Sad	2.3	**84.6**	27.9	1.7	1.0	15.0	**= 22.1**
Fear	1.9	7.1	**54.6**	0.4	4.6	6.3	**= 12.5**
Anger	5.4	0.2	1.9	**79.2**	1.5	6.9	**= 15.8**
Surprise	12.3	1.9	7.7	2.9	**67.5**	12.3	**= 17.4**
Disgust	6.7	4.0	1.9	7.9	5.8	**49.2**	= 12.6
(c) NV-VE:	Happy	Sad	Fear	Anger	Surprise	Disgust	
Response (%)							
Non-ASD							
Happy	**90.5**	1.1	1.5	0.0	4.0	0.7	**= 16.3**
Sad	3.3	**86.9**	6.9	1.5	0.7	0.7	**= 16.7**
Fear	0.7	2.5	**77.5**	6.5	4.4	4.7	**= 16.1**
Anger	0.4	2.9	3.6	**88.0**	0.7	2.9	**= 16.4**
Surprise	4.7	2.9	8.0	1.1	**85.1**	2.2	**= 17.4**
Disgust	0.4	3.6	2.2	2.9	4.7	**88.7**	**= 17.1**
ASD							
Happy	**86.6**	1.0	2.5	0.4	7.8	0.0	**= 16.4**
Sad	3.1	**88.0**	3.7	1.4	0.8	1.6	**= 16.5**
Fear	0.6	3.7	**79.0**	8.2	7.6	2.9	**= 17.0**
Anger	0.0	0.8	2.3	**84.5**	0.4	3.3	**= 15.2**
Surprise	8.2	2.3	10.5	2.3	**77.1**	1.2	**= 17.0**
Disgust	1.4	4.1	2.1	2.9	6.0	**90.9**	**= 17.9**

2000; Calder, Keane, Lawrence, & Manes, 2004), suggestive of a common neural focus for emotion recognition regardless of modality.

This study did not take a developmental approach, so we cannot discount that an early-years difficulty with recognising emotions, with associated developmental ramifications, is later compensated for. However, we can conclude that the broader social communication difficulties in our adolescent sample with ASD do not stem from a specific perceptual emotion recognition deficit. This finding was replicated in a one-factor model, which represented emotion recognition ability as a singular multimodal and multi-emotion construct. However, this model does not best reflect neuropsychological constructs of emotion recognition ability that theorize and demonstrate emotion-specific impairments (e.g., Boraston et al., 2007; Calder et al., 2000, 2004; Corden et al., 2008) and, as such, we favour the six-factor solution. The results appear at odds with the

© 2010 The Authors
Journal of Child Psychology and Psychiatry © 2010 Association for Child and Adolescent Mental Health.

majority of face emotion recognition studies, which have found evidence of a deficit in ASD (e.g., Ashwin et al., 2006; Boraston et al., 2007; Corden et al., 2008; Wallace et al., 2008; Wright et al., 2008) (the data on vocal emotion recognition are too sparse to provide a true precedent). However, our study has used a methodologically sound approach that incorporates the largest sample tested to date, the full range of testable IQ and a narrow age-range. It should also be noted that emotion-specific deficits in just one or two emotions have often been reported in the absence of a global (across emotion) deficit, which does not indicate a *fundamental* emotion recognition dysfunction (e.g., Boraston et al., 2007; Corden et al., 2008; Wright et al., 2008) and the specific emotions that cause difficulty have been variable across studies. Further, studies using different methodologies have also indicated that emotion recognition may be intact in ASD (e.g., Buitelaar, van der Wees, Swaab-Barneveld, & van der Gaag, 1999; Loveland et al., 1997; Ozonoff, Pennington, & Rogers, 1990).

By dividing our groups into those of low (FSIQ < 80) and high (FSIQ ≥ 80) IQ we were also able to investigate the effects of IQ on performance. Participants with a low IQ had significantly worse recognition ability for all emotions, regardless of whether they had an ASD or not, which complements earlier studies demonstrating the importance of IQ on emotion recognition ability (Buitelaar et al., 1999; Loveland et al., 1997). A more recent study reported that individuals with and without ASD and with a low verbal mental age performed similarly on a measure of facial emotion discrimination (Loveland, Bachevalier, Pearson, & Lane, 2008). However, for those with a higher verbal mental age, the ASD group performed significantly more poorly than those without a diagnosis. We found no evidence of a Group × IQ interaction in our own dataset. Comparing our data to a developmental study of performance on the Ekman–Friesen faces (Campbell et al., 2006), both low IQ groups scored at an equivalent level to typically developing 6–7-year-olds, whilst the high IQ groups performed similarly to typically developing 15–17-year-olds. In demonstrating that IQ rather than diagnosis is a discriminator of emotion recognition ability, our findings align with Wright et al. (2008) who found that age, sex and IQ accounted for 55% of the variance on a facial emotion recognition task (total score) amongst a group of children with and without ASD, whilst diagnosis only accounted for an additional 1%.

When discussing these results it should be acknowledged that the recognition of emotional cues can be measured in a variety of ways, and this necessarily limits the generalisability of the results. The current design collates performance from independently measured modes and creates a single index of multi-channel processing proficiency. This is distinct from a cross-modal approach, where the ability to simultaneously integrate information from different modalities produces a unitary response. Therefore, our results cannot speak to the ability of individuals with ASD to simultaneously integrate emotional information across modalities and it is possible that deficits might be apparent at the level of complex multi-sensory integration (although see Loveland et al., 1997 for a null result). Further, the stimuli in the current study represent salient exemplars of the chosen emotions. We cannot infer how the adolescents with ASD would have responded to more ambiguous stimuli, which exhibit less intense expressions of emotion; behavioural results have been mixed (e.g., Castelli, 2005; Humphreys, Minshew, Leonard, & Behrmann, 2007), whilst a recent imaging study suggests a lack of neural modulation to changes in the intensity of facial fear in ASD (Ashwin, Baron-Cohen, Wheelwright, O'Riordan, & Bullmore, 2007). Specific to visual stimuli, there are additional literatures on dynamic facial stimuli (e.g., Gepner, Deruelle, & Grynfeltt, 2001), as well as emotional gesture and bodily expression (e.g., Atkinson, 2009; Hobson, 1986). However, our null result in such a large sample using multimodal measuring of a very specific and fundamental type of cognitive emotion recognition provides an appropriate platform from which to explore and compare variation in performance across the nuances of emotion recognition.

When discussing the limitations of the study it is also important to recognise that the sample size, although large within the ASD literature, provides good power only for effects of medium size or larger. Although our fit indices were good and our confidence intervals acceptable, the impact of this study would be bolstered by replication in other large samples.

A circumscribed difficulty in recognising surprise

We found modest evidence of a circumscribed difficulty with the recognition of surprise. Baron-Cohen et al. (1993) have argued that, unlike emotions such as happiness or sadness that are typically understood at the 'simple' (produced by a situation) level, surprise is invariably a 'cognitive' emotion (produced by a belief), i.e., understanding the person's belief is necessary to understand the emotion. The expression of surprise is further complex as, unlike the other core emotions, it can reflect both positive and negative valance or even be affectively neutral. This varied valance has led to discussion that surprise is not an emotion but is a cognitive state that 'focuses on aspects of knowledge and belief rather than on affect per se' (Ortony & Turner, 1990, p. 317). Concurring with our results, Baron-Cohen et al. (1993) reported that low-functioning children with ASD have difficulty in recognising the facial expression of surprise but not happiness or sadness. The majority

© 2010 The Authors
Journal of Child Psychology and Psychiatry © 2010 Association for Child and Adolescent Mental Health.

of emotion recognition studies have not reported a specific deficit in surprise recognition, although our multimodal approach is better suited to detecting a deficit that is driven by cognitive factors that are not modality-specific. From a different perspective, the social motivation hypothesis (see Dawson, Webb, & McPartland, 2005) asserts that lack of interest in social cues in ASD reduces the attention paid to them, ultimately leading to individuals with a degraded sensitivity for social and emotional nuances. This has echoes of the cognitive avoidance of emotional situations seen in individuals with generalised social anxiety disorder, behaviour that is known to impact upon emotion recognition capabilities (see Montagne et al., 2006 for a discussion). It could be suggested that avoidance of, or inattendance to, social situations exponentially impacts the development of recognition of emotions that are (a) less common in everyday life and (b) dependent on complex social scenarios, including beliefs. We argue that, using these criteria, surprise is the emotion that would be most vulnerable. It is also worth acknowledging that many parents and care-givers learn that their child with ASD responds well to routine and finds surprising or unexpected events difficult to manage. This could lead to care-givers moderating their reactions of surprise and also avoiding exposing their child to events that evoke surprise, which speculatively may contribute to under-exposure of this particular emotional expression.

Emotion recognition processing style is similar in ASD and non-ASD

For all three tasks, analysis of the confusions individuals made when recognising emotions showed a remarkably similar pattern of errors across the groups with and without ASD. This is compatible with the hypothesis that similar styles of deductive reasoning are underpinning comparison of similar visual or auditory information in both groups. For example, both groups mistook facial expressions of fear for surprise around 25% of the time and mistook facial expressions of surprise for fear around 10% of the time; this is arguably due to orienting to and misinterpreting the wide eyes seen in both emotional states. Previous research into the processing style used during emotion recognition in ASD has been focused in the visual domain. Studies of the pattern of eye gaze during face scanning suggest atypical looking patterns in ASD (Hernandez et al., 2009; Pelphrey et al., 2002; although see van der Geest, Kemner, Verbaten, & van Engeland, 2002 for a null effect). However, this seems to be driven by the increased amount of time spent looking at non-core facial features or outside of the picture. When individuals with ASD *are* looking at core facial features they show the same basic pattern of looking preferences as controls, spending more time looking at the eyes and starting gaze search with the eyes (Hernandez et al., 2009; Pelphrey et al., 2002). This seems to suggest that individuals with ASD collect the same pertinent perceptual information as those without ASD, but that the quality of this information is degraded due to reduced looking time, which is perhaps driven by a lack of interest in faces, avoidance of faces or difficulties with attention. Of note, there is suggestion that the modification of gaze focus as a function of emotional expression is the same for those with and without ASD (Hernandez et al., 2009; van der Geest et al., 2002). Although we did not collect eye-tracking data and cannot comment directly on the looking patterns of our own participants, the distribution of confusion errors and the comparable level of performance across groups are congruent with the hypothesis that the visual scanning of core facial features in adolescents with ASD is similar to those without ASD.

Summary

In recognising ASD as a complex behavioural, perceptual and cognitive disorder it is important to isolate potential contributing factors to the expressed symptoms, which are invariably multifaceted. By targeting emotion recognition ability we were able to explore a *relatively* basic and fundamental contributor to social and communication competence. Further, the application of SEM enabled us to model emotion recognition ability more realistically as a composite of multi-channel processing proficiency. Our results suggest that basic emotion recognition ability should not be considered in isolation as the source of the social and communication difficulties observed in ASD.

Acknowledgements

This study was supported by the Medical Research Council (G0400065) and research at the Centre for Research in Autism and Education is supported by the Clothworkers' Foundation and the Pears Foundation. We are grateful to the participants and their parents for generously giving their time to take part in this study.

Correspondence to

Tony Charman, Centre for Research in Autism and Education, Department of Psychology and Human Development, Institute of Education, 25 Woburn Square, London WC1H 0AA, UK; Email: t.charman@ioe.ac.uk

© 2010 The Authors
Journal of Child Psychology and Psychiatry © 2010 Association for Child and Adolescent Mental Health.

Key points

- Emotion recognition ability in ASD has primarily focused on emotion recognition of faces and results have been varied.
- Using a large sample (n = 99) of adolescents with ASD and matched controls, we modelled emotion recognition as a composite of visual (face) and vocal (verbal and non-verbal) emotion recognition ability.
- There was no evidence of a fundamental difficulty with emotion recognition in the adolescents with ASD, although a circumscribed difficulty with surprise was noted.
- IQ had a large and significant effect on performance, with higher IQ adolescents outperforming lower IQ adolescents.
- Clinically, this suggests that basic emotion recognition should not be considered a source of social and communication difficulties in adolescents with ASD.

References

American Psychiatric Association. (2000). *Diagnostic and statistical manual of mental disorders 4th edn – text revision (DSM-IV-TR)*. Washington, DC: American Psychiatric Association.

Ashwin, C., Baron-Cohen, S., Wheelwright, S., O'Riordan, M., & Bullmore, E.T. (2007). Differential activation of the amygdala and the 'social brain' during fearful face-processing in Asperger syndrome. *Neuropsychologia*, *45*, 2–14.

Ashwin, C., Chapman, E., Colle, L., & Baron-Cohen, S. (2006). Impaired recognition of negative basic emotions in autism: A test of the amygdala theory. *Social Neuroscience*, *1*, 349–363.

Atkinson, A.P. (2009). Impaired recognition of emotions from body movements is associated with elevated motion coherence thresholds in autism spectrum disorders. *Neuropsychologia*, *47*, 3023–3029.

Baird, G., Simonoff, E., Pickles, A., Chandler, S., Loucas, T., Meldrum, D., & Charman, T. (2006). Prevalence of disorders of the autism spectrum in a population cohort of children in South Thames: The Special Needs and Autism Project (SNAP). *Lancet*, *368*, 210–215.

Baron-Cohen, S., Spitz, A., & Cross, P. (1993). Do children with autism recognise surprise? A research note. *Cognition and Emotion*, *7*, 507–516.

Boraston, Z., Blakemore, S.J., Chilvers, R., & Skuse, D. (2007). Impaired sadness recognition is linked to social interaction deficit in autism. *Neuropsychologia*, *45*, 1501–1510.

Borod, J.C., Pick, L.H., Hall, S., Sliwinski, M., Madigan, N., Obler, L.K., Welkowitz, J., Canino, E., Erhan, H.M., Goral, M., Morrison, C., & Tabert, M. (2000). Relationships among facial, prosodic and lexical channels of emotional perceptual processing. *Cognition and Emotion*, *14*, 193–211.

Brown, T.A. (2006). *Confirmatory factor analysis*. New York: Guilford Press.

Buitelaar, J.K., van der Wees, M., Swaab-Barneveld, H., & van der Gaag, R.J. (1999). Verbal memory and performance IQ predict theory of mind and emotion recognition ability in children with autistic spectrum disorders and in psychiatric control children. *Journal of Child Psychology and Psychiatry*, *40*, 869–881.

Calder, A.J., Keane, J., Lawrence, A.D., & Manes, F. (2004). Impaired recognition of anger following damage to the ventral striatum. *Brain*, *127*, 1958–1969.

Calder, A.J., Keane, J., Manes, F., Antoun, N., & Young, A.W. (2000). Impaired recognition and experience of disgust following brain injury. *Nature Neuroscience*, *3*, 1077–1078.

Campbell, D.T., & Fiske, D.W. (1959). Convergent and discriminant validation by the multitrait-multimethod matrix. *Psychological Bulletin*, *56*, 81–105.

Campbell, R., Lawrence, K., Mandy, W., Mitra, C., Jeyakuma, L., & Skuse, D. (2006). Meanings in motion and faces: Developmental associations between the processing of intention from geometrical animations and gaze detection accuracy. *Development and Psychopathology*, *18*, 99–118.

Castelli, F. (2005). Understanding emotions from standardized facial expressions in autism and normal development. *Autism*, *9*, 428–449.

Corden, B., Chilvers, R., & Skuse, D. (2008). Avoidance of emotionally arousing stimuli predicts social-perceptual impairment in Asperger's syndrome. *Neuropsychologia*, *46*, 137–147.

Dawson, G., Webb, S.J., & McPartland, J. (2005). Understanding the nature of face processing impairment in autism: Insights from behavioral and electrophysiological studies. *Developmental Neuropsychology*, *27*, 403–424.

Ekman, P., & Friesen, W.V. (1976). *Pictures of facial affect*. Palo Alto, CA: Consulting Psychologists Press.

Garrido, L., Eisner, F., McGettigan, C., Stewart, L., Sauter, D., Hanley, J.R., Schweinberger, S.R., Warren, J.D., & Duchaine, B. (2009). Developmental phonagnosia: A selective deficit to vocal identity recognition. *Neuropsychologia*, *47*, 123–131.

Gepner, B., Deruelle, C., & Grynfeltt, S. (2001). Motion and emotion: A novel approach to the study of face processing by young autistic children. *Journal of Autism and Developmental Disorders*, *31*, 37–45.

Grossman, J.B., Klin, A., Carter, A.S., & Volkmar, F.R. (2000). Verbal bias in recognition of facial emotions in children with Asperger syndrome. *Journal of Child Psychology and Psychiatry*, *41*, 369–379.

Hernandez, N., Metzger, A., Magné, R., Bonnet-Brilhault, F., Roux, S., Barthelemy, C., & Martineau, J. (2009). Exploration of core features of a human face by healthy and autistic adults analyzed by visual scanning. *Neuropsychologia*, *47*, 1004–1012.

Hobson, R.P. (1986). The autistic child's appraisal or expressions of emotion. *Journal of Child Psychology and Psychiatry*, *27*, 321–342.

Hobson, R.P., Ouston, J., & Lee, A. (1988). Emotion recognition in autism: Co-ordinating faces and voices. *Psychological Medicine*, *18*, 911–923.

Humphreys, K., Minshew, N., Leonard, G.L., & Behrmann, M. (2007). A fine-grained analysis of facial expression

© 2010 The Authors
Journal of Child Psychology and Psychiatry © 2010 Association for Child and Adolescent Mental Health.

processing in high-functioning adults with autism. *Neuropsychologia*, *45*, 685–695.

Lindner, J.L., & Rosén, L.A. (2006). Decoding of emotion through facial expression, prosody and verbal content in children and adolescents with Asperger's syndrome. *Journal of Autism and Developmental Disorders*, *36*, 769–777.

Loehlin, J.C. (2004). *Latent variable models: An introduction to factor, path, and structural analysis* (4th edn). Hillsdale, NJ: Lawrence Erlbaum Associates.

Lord, C., Risi, S., Lambrecht, L., Cook, E.H., Leventhal, B.L., DiLavore, P.C., Pickles, A., & Rutter, M. (2000). The Autism Diagnostic Observation Schedule–Generic: A standard measure of social and communication deficits associated with the spectrum of autism. *Journal of Autism and Developmental Disorders*, *30*, 205–223.

Lord, C., Rutter, M., & Le Couteur, A. (1994). Autism Diagnostic Interview–Revised – A revised version of a diagnostic interview for caregivers of individuals with possible pervasive developmental disorders. *Journal of Autism and Developmental Disorders*, *24*, 659–685.

Loveland, K.A., Bachevalier, J., Pearson, D.A., & Lane, D.M. (2008). Front-limbic functioning in children and adolescents with and without autism. *Neuropsychologia*, *15*, 49–62.

Loveland, K.A., Tunali-Kotoski, B., Chen, Y.R., Ortegon, J., Pearson, D.A., Brelsford, K.A., & Gibbs, M.C. (1997). Emotion recognition in autism: Verbal and nonverbal information. *Development and Psychopathology*, *9*, 579–593.

Marsh, H.W. (1989). Confirmatory factor analysis of multitrait-multimethod data: Many problems and a few solutions. *Applied Psychological Measurement*, *13*, 335–361.

Mazefsky, C.A., & Oswald, D.P. (2007). Emotion perception in Asperger's syndrome and high-functioning autism: The importance of diagnostic criteria and cue intensity. *Journal of Autism and Developmental Disorders*, *37*, 1086–1095.

Muthén, L.K., & Muthén, B.O. (1998-2007). *Mplus user's guide* (5th edn). Los Angeles, CA: Muthén & Muthén.

Montagne, B., Schutters, S., Westenberg, H.G., van Honk, J., Kessels, R.P., & de Haan, E.H. (2006). Reduced sensitivity in the recognition of anger and disgust in social anxiety disorder. *Cognitive Neuropsychiatry*, *11*, 389–401.

O'Connor, K. (2007). Brief report: Impaired identification of discrepancies between expressive faces and voices in adults with Asperger's syndrome. *Journal of Autism and Developmental Disorders*, *37*, 2008–2013.

Ortony, A., & Turner, T.J. (1990). What's basic about basic emotions? *Psychological Review*, *97*, 315–331.

Ozonoff, S., Pennington, B.F., & Rogers, S.J. (1990). Are there emotion perception deficits in young autistic children? *Journal of Child Psychology and Psychiatry*, *31*, 343–361.

Pelphrey, K.A., Sasson, N.J., Reznick, J.S., Paul, G., Goldman, B.D., & Piven, J. (2002). Visual scanning of faces in autism. *Journal of Autism and Developmental Disorders*, *32*, 249–261.

Philip, R.C.M., Whalley, H.C., Stanfield, A.C., Sprengelmeyer, R., Santos, I.M., Young, A.W., Atkinson, A.P., Calder, A.J., Johnstone, E.C., Lawrie, S.M., & Hall, J. (in press). Deficits in facial, body movement and vocal emotional processing in autism spectrum disorders. *Psychological Medicine*, available on CJO 27 Jan 2010 doi:10.1017/S0033291709992364.

Prior, M., Dahlstrom, B., & Squires, T.L. (1990). Autistic children's knowledge of thinking and feeling states in other people. *Journal of Child Psychology and Psychiatry*, *31*, 587–601.

Rutter, M., Bailey, A., & Lord, C. (2003). *Social Communication Questionnaire (SCQ)*. Los Angeles, CA: Western Psychological Services.

Sauter, D. (2006). *An investigation into vocal expressions of emotions: The roles of valence, culture and acoustic factors*. University College London.

Sauter, D., Calder, A.J., Eisner, F., & Scott, S.K. (in press). Perceptual cues in non-verbal vocal expressions of emotion. *Quarterly Journal of Experimental Psychology*, First published on: 29 April 2010 (iFirst).

Sauter, D., & Scott, S.K. (2007). More than one kind of happiness: Can we recognise vocal expressions of different positive states? *Motivation and Emotion*, *31*, 192–99.

Scott, S.K., Young, A.W., Calder, A.J., Hellawell, D.J., Aggleton, J.P., & Johnson, M. (1997). Impaired auditory recognition of fear and anger following bilateral amygdala lesions. *Nature*, *385*, 254–257.

StataCorp. (2009). *Statistical software: Release 11.0*. College Station, TX: Stata Corporation.

van der Geest, J.N., Kemner, C., Verbaten, M.N., & van Engeland, H. (2002). Gaze behaviour of children with pervasive developmental disorder toward human faces: A fixation time study. *Journal of Child Psychology and Psychiatry*, *43*, 669–678.

Wallace, S., Coleman, M., & Bailey, A. (2008). An investigation of basic facial expression recognition in autism spectrum disorders. *Cognition and Emotion*, *22*, 1353–1380.

Wechsler, D. (1999). *The Wechsler Abbreviated Scale of Intelligence – UK*. San Antonio, TX: The Psychological Corporation.

Wright, B., Clarke, N., Jordan, J., Young, A.W., Clarke, P., Miles, J., Nation, K., Clarke, L., & Williams, C. (2008). Emotion recognition in faces and the use of visual context in young people with high-functioning autism spectrum disorders. *Autism*, *12*, 607–626.

World Health Organisation. (1993). *Mental disorders: A glossary and guide to their classification in accordance with the 10th revision of the International Classification of Diseases: Research diagnostic criteria (ICD-10)*. Geneva: WHO.

Manuscript accepted 2 July 2010

© 2010 The Authors
Journal of Child Psychology and Psychiatry © 2010 Association for Child and Adolescent Mental Health.