Downloaded from UvA-DARE, the institutional repository of the University of Amsterdam (UvA)
http://dare.uva.nl/document/144319

File ID	144319
Filename	Chapter 5: Sphingosine-1-phosphate regulates RGS2 and RGS16 mRNA expression in vascular smooth muscle cells

SOURCE (OR PART OF THE FOLLOWING SOURCE):

Type	Dissertation
Title	Regulation of cardiovascular GPCR signalling
Author	M.C. Balk
Faculty	Faculty of Medicine
Year	2009
Pages	160
ISBN	978-90-8559-556-4

FULL BIBLIOGRAPHIC DETAILS:
http://dare.uva.nl/record/313995

Copyright

It is not permitted to download or to forward/distribute the text or part of it without the consent of the author(s) and/or copyright holder(s), other then for strictly personal, individual use.

UvA-DARE is a service provided by the library of the University of Amsterdam (http://dare.uva.nl)

5

Sphingosine-1-phosphate regulates RGS2 and RGS16 mRNA expression in vascular smooth muscle cells

Mariëlle C. Hendriks-Balk, Najat Hajji, Pieter B. van Loenen, Martin C. Michel, Stephan L.M. Peters, Astrid E. Alewijnse

European Journal of Pharmacology 2009; 606(1-3):25-31

ABSTRACT

Regulator of G protein signalling (RGS) protein expression is altered under growth promoting conditions in vascular smooth muscle cells (VSMCs). Since sphingosine-1-phosphate (S1P) is an important growth stimulatory factor, we investigated whether stimulation of VSMCs with S1P results in alterations in mRNA expression levels of several RGS proteins and which signalling components are involved.

VSMCs were stimulated with S1P and mRNA expression levels of RGS2, RGS3, RGS4, RGS5 and RGS16 were measured by real-time polymerase chain reaction.

S1P caused a time-dependent up-regulation of RGS2 and RGS16 mRNA expression. FTY720-P, a $S1P_1$/$S1P_{3-5}$ agonist, did not regulate RGS2 mRNA levels although it did up-regulate RGS16 mRNA expression. Pertussis toxin treatment revealed that the S1P-induced RGS16 expression was $G_{i/o}$-dependent whereas up-regulation of RGS2 mRNA was not. Phosphatidylinositol 3-kinase, protein kinase C and mitogen-activated protein kinase kinase apparently were not involved in the S1P-induced up-regulation of both RGS proteins.

The present study demonstrates that S1P induces RGS2 and RGS16 mRNA expression but uses distinct S1P receptor subtypes and signalling pathways to regulate expression of these RGS proteins.

INTRODUCTION

Regulator of G protein signalling (RGS) proteins comprises a family of proteins that display GTPase-activating protein activity towards Gα-subunits of the heterotrimeric G proteins (Hollinger and Hepler, 2002). RGS proteins contain a highly conserved 120-130 amino acid domain (RGS domain) which is responsible for the direct interaction with the activated Gα and enhances GTP hydrolysis thereby decreasing the life-time of active Gα-GTP and free Gβγ-subunits (Hollinger and Hepler, 2002). More than 30 distinct mammalian RGS and RGS-like proteins have been identified which are divided into six subfamilies based on amino acid sequence (Ross and Wilkie, 2000; Siderovski and Willard, 2005). RGS proteins interact selectively with G proteins and G protein-coupled receptors (Hendriks-Balk et al., 2008a; Xie et al., 2007).

Emerging evidence suggests an important role for RGS proteins in the cardiovascular system (for extensive reviews see (Hendriks-Balk et al., 2008a; Riddle et al., 2005; Wieland and Mittmann, 2003)). Most importantly, RGS2 was shown to be crucial in the regulation of vascular tone as RGS2 deficiency in animals was associated with severe hypertension and a prolonged vasoconstriction (Heximer et al., 2003; Sun et al., 2005; Tang et al., 2003). In line with these findings, expression profiling of saphenous artery from normotensive versus hypertensive rats showed a decreased expression of RGS2 mRNA in hypertensive animals (Grayson et al., 2007). Moreover, hypertensive patients were also described to possess decreased RGS2 expression levels (Semplicini et al., 2006; Yang et al., 2005) whereas cells from patients with Bartter's/Gitelman's syndrome, which is amongst others characterized by hypotension, show an increase in RGS2 mRNA and protein expression (Calo et al., 2008; Calo et al., 2004). More limited evidence indicates that changes in RGS5 expression levels may also be associated with hypertension (Cho et al., 2008; Grayson et al., 2007).

Hypertension is not only characterized by an increased vascular tone but also by vascular remodelling as a result of smooth muscle cell hypertrophy (Touyz, 2005). Recently, we have shown that phenotypic modulation of smooth muscle cells from a synthetic to more proliferative phenotype is associated with changes in mRNA expression of some RGS proteins in these cells (Hendriks-Balk et al., 2008b). More specifically, we showed that upon culturing RGS4 mRNA and protein and RGS16 mRNA expression were down-regulated whereas RGS5 mRNA was transiently up-regulated. These results suggest that these RGS proteins may also play a role in processes that involve proliferation and migration of smooth muscle cells, such as vascular remodelling and intimal hyperplasia. In addition, Wang et al. (Wang et al., 2008) recently described that the induction of smooth muscle hypertrophy by aortic banding resulted in changes in expression of RGS2, RGS4 and RGS5. In the cardiovascular system, various vasoactive factors including angiotensin II, have growth stimulatory properties and induce smooth muscle cell hypertrophy (Demoliou-Mason, 1998). These growth promoting effects may in part depend on the regulation of RGS expression levels as angiotensin II has e.g. been reported to rapidly increase RGS2 mRNA and protein levels in vascular smooth muscle

cells (VSMCs) (Grant et al., 2000; Li et al., 2005; Xie and Palmer, 2007). Besides angiotensin II, another key factor known to be involved in smooth muscle cell proliferation is sphingosine-1-phosphate (S1P) (Alewijnse and Peters, 2008; Inoue et al., 2007). A recent study provided evidence that $S1P_1$/$S1P_3$ receptors promote VSMC proliferation and phenotypic modulation in vitro in response to S1P, or in vivo after vascular injury, whereas $S1P_2$ receptors were shown to antagonize these effects (Wamhoff et al., 2008).

In this study we investigated whether S1P, as a direct stimulus of growth, affects the mRNA expression of several RGS proteins in VSMCs. In addition, we investigated the involvement of specific signalling pathways in the S1P-induced regulation of some RGS proteins.

MATERIALS AND METHODS

Materials

Collagenase I (crude), elastase type I, gelatine, soybean trypsin inhibitor, pertussis toxin (PTX), actinomycin D, U73122 (1-(6-((17b-3-methoxyestra-1,3,5(10)-trien-17-yl)amino)hexyl)-1H-pyrrole-2,5-dione) and bovine serum albumin (BSA) were obtained from Sigma-Aldrich (Zwijndrecht, The Netherlands).

S1P was obtained from Avanti Polar Lipids Inc (via Instruchemie, Delfzijl, The Netherlands). U0126 (1,4-diamino-2,3-dicyano-1,4-bis(2-aminophenylthio)butadiene) was purchased from Promega (Leiden, The Netherlands). Calphostin C and LY294002 (2-(4-Morpholinyl)-8-phenyl-4H-1-benzopyran-4-one) were from Calbiochem (via VWR, Amsterdam, The Netherlands). FTY720-P (2-Amino-2-[2-(4-octylphenyl)ethyl]-1,3-propanediol monodihydrogen phosphate ester) was synthesized according to previously described methods (Albert et al., 2005).

Isolation and culture of vascular smooth muscle cells

The experimental protocol was approved by the Animal Ethical Committee of the University of Amsterdam and was in line with the Guide for the Care and Use of Laboratory Animals published by the US National Institutes of Health (NIH Publication No. 85-23, revised 1996). Male Wistar rats (240-280 g, Charles River, Maastricht, The Netherlands) were killed by an overdose pentobarbital (100 mg/kg, i.p.) and their thoracic aortas were removed. The aortas were cleaned of fat and connective tissue under aseptic conditions and rinsed several times in Medium 199 (Invitrogen, Breda, The Netherlands) containing penicillin (100 U/ml) and streptomycin (100 µg/ml) (Invitrogen). The cleaned vessels were incubated, shaking, at 30 °C in 5 ml digestion medium (Medium 199 containing 1 mg/ml collagenase I, 0.1 mg/ml elastase, 0.5 mg/ml soybean trypsin inhibitor, 1 mg/ml BSA and penicillin/streptomycin) for 30 min before the adventitial layer was removed as an everted tube. The remaining tissue was rinsed with

Medium 199 containing antibiotics and further incubated in 5 ml digestion medium at 37 °C for 45 min. The partly digested tissue was then rinsed in Medium 199 containing antibiotics, cut into very small pieces and incubated for a further 2.5 h in 8 ml digestion medium at 37 °C. After digestion single cells were prepared by tituration and washed twice by resuspension in Medium 199 supplemented with 20% foetal bovine serum (FBS; Invitrogen) and antibiotics. The isolated VSMCs were cultured in flasks coated with 0.1% gelatine in Medium 199 supplemented with 20% FBS and antibiotics for one week with changing the medium every 2-3 days. These VSMCs were defined as passage 0. After first subculturing using trypsin/EDTA (Invitrogen) VSMCs were cultured in Medium 199 containing 10% FBS and antibiotics (with 0.1% gelatine coating). They were cultured until confluency with change of medium every 2-3 days before the cells were split 1:2. When subculturing the VSMCs the passage number was increased by one. VSMCs of passage 4 and 5 were used in the experiments. Cells were cultured at 37 °C in humidified air containing 5% CO_2.

RNA isolation and cDNA synthesis

VSMCs of passages 4 and 5 were cultured into 6 cm culture dishes coated with 0.1% gelatine and grown until confluency. After serum starvation overnight the cells were stimulated for the indicated time at 37 °C, washed twice with phosphate buffered saline and lysed with 2 ml Trizol reagent (Invitrogen).

Total RNA was isolated according to the manufacturer's protocol with minor changes, using a second chloroform extraction to remove traces of phenol in the aqueous phase, a high salt solution (0.8 M sodium citrate, 1.2 M NaCl) together with isopropanol to precipitate RNA and a second wash of the RNA pellet with 75% ethanol. RNA purity was verified by gel electrophoresis (Experion RNA StdSense Analysis Kit, Bio-Rad Laboratories, Veenendaal, The Netherlands) and the RNA concentration was determined by spectrophotometry (Nanodrop, Isogen Life Science). To eliminate genomic DNA contamination 1 µg of total RNA was treated with 1 µl DNAse I, Amplification Grade (Invitrogen). The RNA sample was split into a sample for cDNA synthesis and a control sample. cDNA was synthesized by reverse transcription using the iScript cDNA Synthesis kit (Bio-Rad Laboratories) according to the manufacturer's protocol. A control for the presence of genomic DNA, in which no cDNA was synthesized, was made for each sample. The cDNA of 1µg RNA was diluted 1:50 for use in real-time quantitative PCR.

Primer design and real-time PCR

Oligonucleotide primers were designed using the D-LUX designer software (Invitrogen), based on sequences from the GenBank database (see Table 1). Each primer pair was tested for selectivity, sensitivity and PCR efficiency. Constitutively expressed elongation factor-1 (EF-

1) and p0 ribosomal protein were selected as endogenous controls to correct for potential variation in RNA loading and quality (for criteria see (Hendriks-Balk et al., 2007)).

Relative quantification of mRNA was performed on a MyiQ Single-Color Real-Time PCR Detection System (Bio-Rad Laboratories) following the thermal protocol: 95°C for 3 min to denature, 40 cycles (for RGS16 55 cycles) at 95°C for 10 s followed by 60°C for 45 s for annealing and extension. The final reaction mixture of 15µl consisted of diluted cDNA, 1x iQ™ SYBR® Green Supermix (Bio-Rad Laboratories), 200nM forward primer and 200nM reverse primer. All the reactions were performed in 96-well plates, in duplicate. Controls for genomic DNA were included for each cDNA sample and also a negative control containing only both primers and the iQ Sybr Green Supermix. All data were corrected for difference in RNA loading using the expression of EF-1 and p0 ribosomal protein, which did not change upon stimulation.

Data analysis

QPCR data were analysed using the Gene expression Macro software (Bio-Rad Laboratories) based on algorithms of Vandesompele et al. (Vandesompele et al., 2002). The data are expressed as mean relative expression and standard error of the mean (S.E.M.) and related to the expression level in the unstimulated VSMCs. Statistical analysis of the relative expression was performed with a one-way ANOVA with a Dunnett's correction using GraphPad Instat (GraphPad Software, San Diego, CA, USA) or a t-test when appropriate. A $P<0.05$ was considered as statistically significant.

Table 1. Oligonucleotide primers used for real-time quantitative polymerase chain reaction. Non-capital letters indicate that these nucleotides are added to form a hairpin.

Gene	accession		sequence	amplicon
RGS2	NM_053453	forward	TCTGGTTGGCTTGCGAAGACT	111
		reverse	catcgaCTTTGGGAGCTTCCTTCTCGAtG	
RGS3	NM_019340	forward	GAGGCTCCATGCACCACCTT	67
		reverse	cacaggTCAGTCCCACTCATCTTCCTGtG	
RGS4	AF117211	forward	cggtatCTGATGGAAAAGGATTCATACcG	78
		reverse	GCTGGAAGGATTGGTCAGGTC	
RGS5	AF241259	forward	TGGCAGAGAAGGCAAAGCAA	138
		reverse	cacagcGGGCCAGGTCAAAGCTGtG	
RGS16	AY651775	forward	cgtgtcAGAGCCAAAGAGTTCAAGACAcG	91
		reverse	CCCACTCGAATTTGCCGTTAC	
iNOS	NM_012611	forward	GTCCGCAAGGGAGTGTTGTTC	70
		reverse	cggaaCGTAGACCTTGGGTTTT	
EF-1	NM_175838	forward	GCAAGCCCATGTGTGTTGAA	96
		reverse	TGATGACACCCACAGCAACTG	
p0 ribosomal protein	X15096	forward	cacagaAGGGTCCTGGCTTTGTCTGtG	91
		reverse	CGCAAATGCAGATGGATCG	

RESULTS

Regulation of RGS expression by S1P in cultured VSMCs

We determined changes in mRNA expression of RGS2, RGS3, RGS4, RGS5 and RGS16 in cultured VSMCs after stimulation with S1P (1 μM) for the indicated time. The expression of RGS2 and RGS16 mRNA was transiently increased after 1 and 2 h of S1P stimulation (Fig. 1). No time-dependent alterations in RGS3, RGS4 and RGS5 mRNA expression were found after stimulation with S1P (Fig. 1). At concentrations up to 0.1 μM S1P did not induce a significant up-regulation of RGS2 and RGS16 mRNA expression after 1 h stimulation (Fig. 2). Only at the highest concentration the S1P-induced increase in RGS2 and RGS16 mRNA expression was significant (Fig. 2).

S1P receptor subtypes mediating RGS2 and RGS16 up-regulation

Stimulation of the VSMCs with FTY720-P (1 μM), an agonist for all S1P receptor subtypes except $S1P_2$, for 1 h failed to increase RGS2 mRNA expression (Fig. 3). In contrast, RGS16 expression was significantly up-regulated by FTY720-P (Fig. 3) although to a lesser extent than by S1P (relative RGS16 expression: 2.1 ± 0.5 by FTY720-P and 17.8 ± 9.1 by S1P, n=4-5).

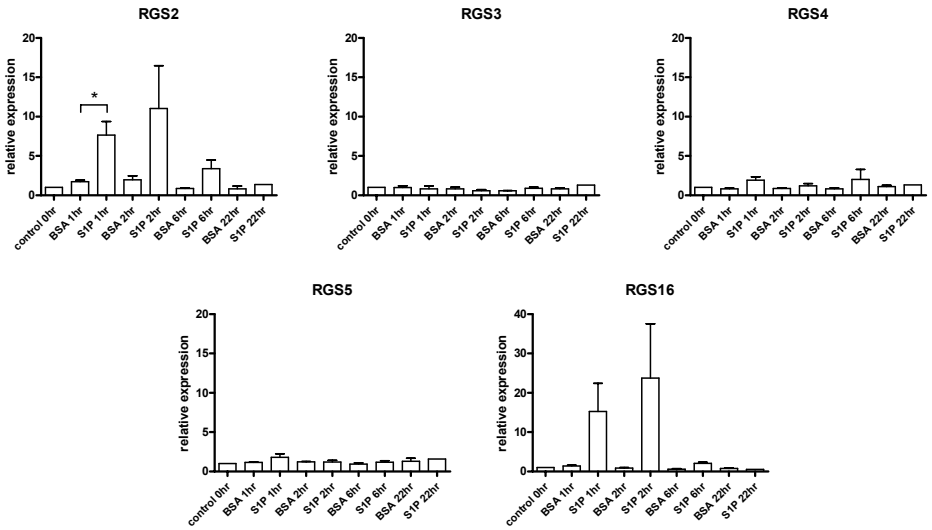

Fig. 1. Contractile responses in rat aortic rings to phenylephrine (A), angiotensin II (B), endothelin-1 (C) and serotonin (D) after exposure to different concentrations LPS for 22 h. Inset in A: log EC_{50} values of the contractile response to phenylephrine after LPS exposure. For angiotensin II-induced constriction, aortic rings were pre-incubated with L-NNA (0.1 mM) for 20 min. Data are expressed as means ± S.E.M., n=3-13.

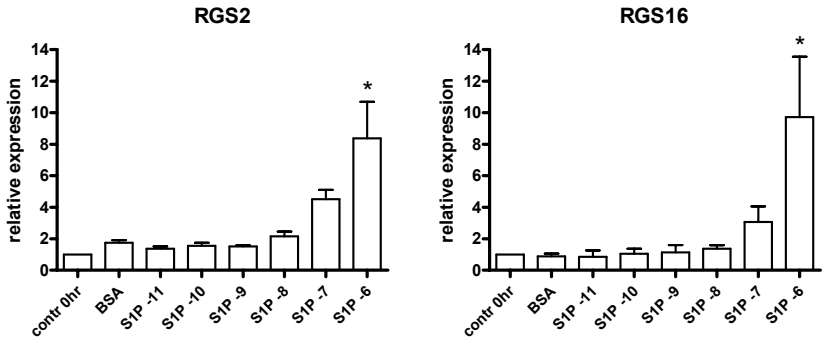

Fig. 2. Time-dependency of LPS-induced regulation of mRNA expression levels of RGS proteins upon 10 μg/ml LPS exposure. Data are expressed relative to unexposed VSMCs at starting point (t=0 hr), which was set arbitrarily to one in each experiment. Mean raw Ct values at starting point are: 30 ± 0.5 (RGS2), 28 ± 0.4 (RGS3), 28 ± 1 (RGS4), 30 ± 1 (RGS5) and 34 ± 2 (RGS16). Relative expression levels are presented as mean ± S.E.M., n=3-6; *P<0.05. Note differences in y-axis scale.

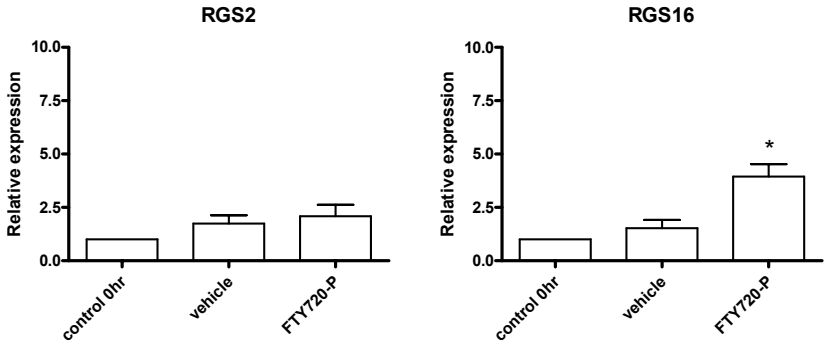

Fig. 3. mRNA expression levels of RGS5 (A) and RGS16 (B) in VSMCs after 2 h exposure to different concentrations of LPS. Inset in B: mRNA expression level of RGS16 in aortic rings after 2 h exposure to 1 μg/ml LPS. Data are expressed relative to unexposed VSMCs at starting point (t=0 hr) or to vehicle exposure in aortic rings, which was set arbitrarily to one in each experiment. Mean raw Ct values at starting point are: 28 ± 1 (RGS5), 34 ± 1 (RGS16, VSMCs) and 30 ± 1 (RGS16, aortic rings). Relative expression levels are presented as mean ± S.E.M., n=3-5, *P<0.05 compared to vehicle exposure for 2 h.

S1P signalling pathway components mediating RGS2 and RGS16 up-regulation

To investigate whether $G_{i/o}$ proteins are involved in the S1P-induced RGS2 and RGS16 mRNA up-regulation, VSMCs were pre-incubated overnight with PTX (100 μg/ml) prior to stimulation with S1P (1 μM) for 1 h. Pre-incubation with PTX did not affect the S1P-mediated up-regulation of RGS2 (Fig. 4). In contrast, the up-regulation of RGS16 mRNA by S1P was prevented upon PTX treatment (Fig. 4).

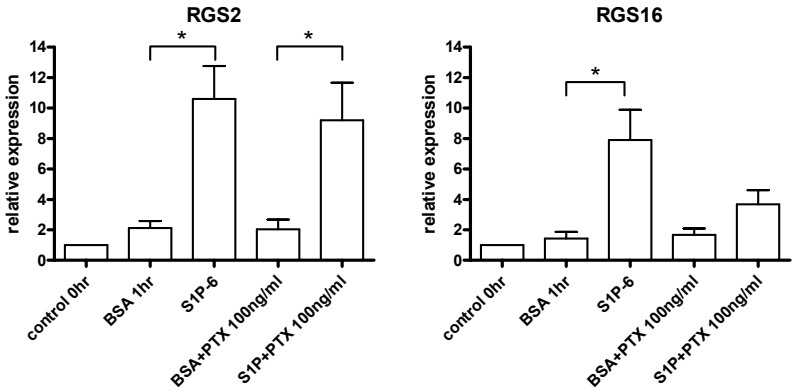

Fig. 4. Effect of PTX on S1P-mediated up-regulation of RGS2 and RGS16 mRNA. VSMCs were pre-incubated overnight with PTX (100 μg/ml) followed by one hour S1P (1 μM) stimulation in the presence of PTX. Data are expressed relative to unstimulated VSMCs at starting point (t=0 hr), which was set to unity in each experiment. Mean raw Ct values at starting point are: 33 ± 2 (RGS2) and 35 ± 1 (RGS16), n=5, *P<0.05.

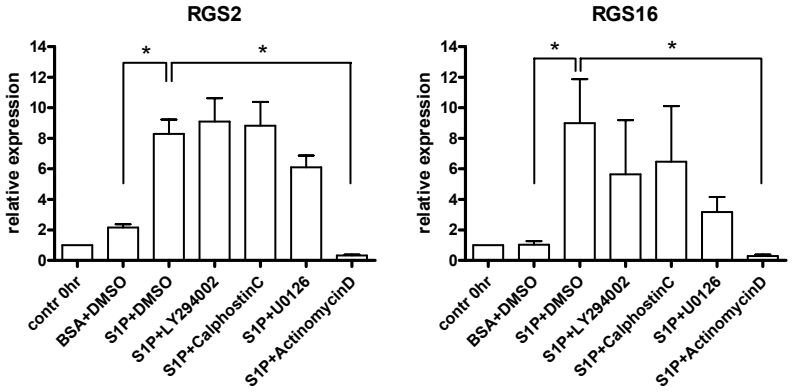

Fig. 5. Effect of several enzyme inhibitors and actinomycin D on S1P-mediated up-regulation of RGS2 and RGS16 mRNA. VSMCs were pre-incubated for 15 min with LY294002 (10 μM), calphostin C (1 μM), U0126 (10 μM) or for 30 min with actinomycin D (7.5 μg/ml) followed by one hour S1P (1 μM) stimulation in the presence of the compounds. Data are expressed relative to unstimulated VSMCs at starting point (t=0 hr), which was set to unity in each experiment. Mean raw Ct values at starting point are: 32 ± 1 (RGS2) and 35 ± 1 (RGS16), n=3-13, *P<0.05.

To explore whether phospholipase C (PLC), phosphatidylinositol 3-kinase (PI3-kinase), protein kinase C (PKC) or mitogen-activated protein kinase kinase (MEK) is involved in the transient changes in RGS2 and RGS16 mRNA expression, VSMCs were pre-incubated for 15 min with U73122 (10 μM), LY294002 (10 μM), calphostin C (1 μM) or U0126 (10 μM), respectively, prior to stimulation with S1P (1 μM) for 1 h. Treatment with the PLC inhibitor U73122 resulted in cell

death (data not shown), which prevented further analysis of this pathway in RGS regulation. LY294002, calphostin C or U0126 did not significantly inhibit the S1P-mediated up-regulation of RGS2 or RGS16 mRNA (Fig. 5), although a partial inhibition by U0126 could not be excluded with certainty, in particular for RGS16 expression.

To determine whether the up-regulation of RGS2 and RGS16 mRNA by S1P was transcriptionally mediated, VSMCs were pre-incubated with actinomycin D (7.5 μg/ml) for 30 min prior to S1P (1 μM) stimulation for 1 h. Pre-incubation with actinomycin D completely abolished the S1P-mediated up-regulation of RGS2 and RGS16 mRNA (Fig. 5) whereas mRNA expression of the reference genes EF-1 and p0 ribosomal protein was not affected.

DISCUSSION

In this study we show that S1P, which is an important growth stimulatory factor, induced a rapid and transient up-regulation of RGS2 and RGS16 mRNA expression in cultured VSMCs, whereas RGS3, RGS4 and RGS5 mRNA expression are not regulated upon S1P stimulation.

Several studies suggested an association between hypertrophy and the regulation of RGS2 expression (Wang et al., 2008; Zhang et al., 2006; Zou et al., 2006). For example, induction of vascular hypertrophy by aortic banding is, after an initial decrease, accompanied by a large increase in RGS2 mRNA expression (Wang et al., 2008). In line with these findings, Zhang et al. (Zhang et al., 2006) reported in animal models with enhanced $G_{q/11}$ signalling a marked decrease in cardiac RGS2 expression that occurred prior to the development of hypertrophy. Also, in saphenous artery from hypertensive when compared to normotensive rats RGS2 mRNA expression levels are found to be regulated (Grayson et al., 2007). Finally, the hypertrophic factor, angiotensin II, has been found to increase RGS2 expression in VSMCs (Grant et al., 2000; Li et al., 2005; Zou et al., 2006). The association between hypertrophy and the regulation of RGS16 mRNA expression levels is less clear as there is no direct evidence showing regulation of this gene under hypertrophic conditions. Interestingly however, it has been shown recently that the hypertrophic factors S1P and endothelin-1 can stimulate the promoter activity of the RGS16 gene in cardiomyocytes (Stuebe et al., 2008).

Interestingly the regulation of RGS2 or RGS16 mRNA expression upon stimulation of VSMCs with S1P seems to involve different S1P receptor subtypes. VSMCs are generally described to abundantly express the $S1P_2$ receptor with lower expression of the $S1P_3$ and $S1P_1$ receptor (Michel et al., 2007). Our studies in cultured VSMCs at passages 4 and 5 indeed confirmed the expression of the $S1P_{1-3}$ receptors in these cells although no major differences in mRNA expression between the three receptor subtypes were detected (Hendriks-Balk et al., 2008b). Interestingly, the $S1P_1$/$S1P_{3-5}$ receptor agonist FTY720-P, in contrast to S1P, did not up-regulate the expression of RGS2 mRNA in VSMCs suggesting that the RGS2 up-regulation is most likely $S1P_2$ receptor-mediated. In this respect it is of interest to mention that, in line with this

suggestion, S1P signalling in VSMCs also most importantly involved $S1P_2$ receptor-mediated increases in intracellular [Ca^{2+}] (Alewijnse et al., 2008). The involvement of $S1P_3$ receptors, however, cannot be fully excluded because recent evidence suggested that FTY720-P prefers the stimulation of $S1P_3$ receptor-mediated $G_{i/o}$ mediated signalling pathways over $G_{q/11}$ mediated ones (Sensken et al., 2008).

The apparent role of the $S1P_2$ receptor in the S1P-induced increase in RGS2 mRNA expression is quite striking as the $S1P_2$ receptor is suggested to inhibit proliferation and migration of VSMCs (Okamoto et al., 2000; Tamama and Okajima, 2002) whereas hypertrophy is generally associated with RGS2 up-regulation (Wang et al., 2008; Zhang et al., 2006; Zou et al., 2006). Therefore, we propose that the up-regulation of RGS2 is part of a compensatory mechanism attenuating the proliferative effects of hypertrophic factors including S1P and angiotensin II. The protective role of RGS2 in hypertrophy was confirmed by down-regulation or knockout of RGS2 (Heximer et al., 2003; Zhang et al., 2006). In cardiomyocytes down-regulation of RGS2 was demonstrated to increase the hypertrophic effect of phenylephrine and endothelin-1 (Zhang et al., 2006). Moreover, RGS2 knockout mice developed vascular hypertrophy, in addition to severe hypertension and prolonged vasoconstriction (Heximer et al., 2003). The inhibitory effect of the $S1P_2$ receptor on proliferation might thus partly be due to its induction of RGS2 mRNA. Therefore, it is also not surprising that the $S1P_1$ and $S1P_3$ receptors are not involved in the up-regulation of RGS2 mRNA as these receptors are reported to promote VSMC proliferation (Okamoto et al., 2000; Peters and Alewijnse, 2007; Tamama and Okajima, 2002).

In contrast to the up-regulation of RGS2 mRNA, the S1P-induced up-regulation of RGS16 mRNA was only partly mimicked by FTY720-P, indicating that it may involve an $S1P_2$ receptor plus an additional, as yet unidentified S1P receptor subtype (Fig. 6).

It is still unknown whether the up-regulation of RGS2 and RGS16 might be part of a negative feedback pathway for the S1P receptor signalling in the VSMCs. Over-expression of RGS2 in human aortic smooth muscle cells did not attenuate S1P-induced extracellular signal-regulated kinase (ERK) phosphorylation (Cho et al., 2003). However, over-expression of RGS2 was found to inhibit the $S1P_3$ receptor-induced ERK activity in HEK293 cells, but not of the $S1P_2$ receptor (Cho et al., 2003). In addition, RGS2 was found to be involved in the decreased cell motility of $S1P_1$ receptor-expressing CHO cells at micromolar S1P concentrations (Kohno and Igarashi, 2008). However, RGS2 over-expression as well as RGS16 over-expression, had no effect on $S1P_1$ and $S1P_3$ receptor-mediated inhibition of cAMP signalling in CHO cells (Hendriks-Balk et al., 2008b). It is possible that RGS2 and RGS16 are up-regulated by S1P to inhibit signalling of other receptors present in VSMCs, e.g. the angiotensin II AT_1 receptor, as RGS2 was demonstrated to attenuate angiotensin II signalling in VSMCs (Li et al., 2005).

Besides the difference in the receptor subtypes involved, the regulation of RGS2 and RGS16 mRNA expression also involves different signalling pathways. The increase in RGS2 mRNA expression occurs via PTX-insensitive signalling pathways whereas RGS16 mRNA up-

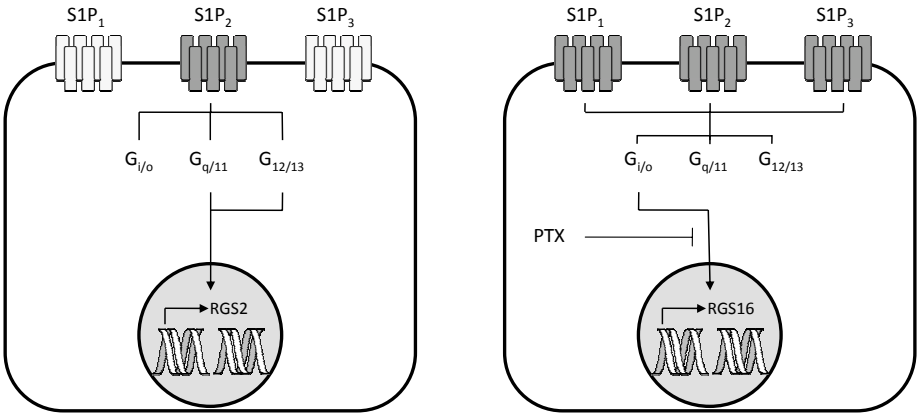

Fig. 6. Schematic overview of the differential S1P-induced regulation of RGS2 and RGS16 mRNA expression. S1P induces the up-regulation of RGS2 mRNA probably via the $S1P_2$ receptor and independent of $G_{i/o}$ proteins. Up-regulation of RGS16 mRNA by S1P involves several S1P receptor subtypes and is $G_{i/o}$-dependent.

regulation is sensitive to PTX treatment and thus most importantly occurs via $G_{i/o}$-mediated pathways (Fig. 6). These findings for RGS16 mRNA expression are in line with the findings on the S1P-induced stimulation of the RGS16 promoter activity in cardiomyocytes which was also shown to involve $G_{i/o}$ proteins (Stuebe et al., 2008). In addition, our study shows that the S1P-induced increase in RGS2 mRNA expression is, in contrast to findings reported for angiotensin II, (Grant et al., 2000) independent of PKC activation.

Furthermore, we show that the S1P-induced up-regulation of RGS2 mRNA did not require PI3-kinase and MEK. Similar to the S1P-induced RGS2 expression, the up-regulation of RGS16 was insensitive to the inhibition of PKC, PI3-kinase and MEK, although a role for the latter could not be excluded with certainty.

In conclusion, this study demonstrates that S1P, which is an important hypertrophic factor, induces RGS2 and RGS16 mRNA expression in VSMCs. Furthermore it demonstrates that the S1P receptor subtypes and the signalling pathways involved in the regulation of both RGS proteins are different. As RGS proteins are known to inhibit the signalling of various G-protein coupled receptors, (Hendriks-Balk et al., 2008a) such regulation of both RGS2 and RGS16 expression levels might subsequently play an important role in modulating VSMC proliferation and hence vascular remodelling.

REFERENCES

Albert, R., Hinterding, K., Brinkmann, V., Guerini, D., Muller-Hartwieg, C., Knecht, H., Simeon, C., Streiff, M., Wagner, T., Welzenbach, K., Zecri, F., Zollinger, M., Cooke, N., Francotte, E., 2005. Novel immunomodulator FTY720 is phosphorylated in rats and humans to form a single stereoisomer. Identification, chemical proof, and biological characterization of the biologically active species and its enantiomer. J Med Chem 48, 5373-5377.

Alewijnse, A.E., Jongsma, M., Mathy, M.-J., van Loenen, P.B., Hajji, N., Michel, M.C., Peters, S.L., 2008. Characterization of the vasoactive properties of S1P receptors in rat aorta. Faseb J 22, 912.914 (Abstract).

Alewijnse, A.E., Peters, S.L., 2008. Sphingolipid signalling in the cardiovascular system: good, bad or both? Eur J Pharmacol 585, 292-302.

Calo, L.A., Pagnin, E., Ceolotto, G., Davis, P.A., Schiavo, S., Papparella, I., Semplicini, A., Pessina, A.C., 2008. Silencing regulator of G protein signaling-2 (RGS-2) increases angiotensin II signaling: insights into hypertension from findings in Bartter's/Gitelman's syndromes. J Hypertens 26, 938-945.

Calo, L.A., Pagnin, E., Davis, P.A., Sartori, M., Ceolotto, G., Pessina, A.C., Semplicini, A., 2004. Increased expression of regulator of G protein signaling-2 (RGS-2) in Bartter's/Gitelman's syndrome. A role in the control of vascular tone and implication for hypertension. J Clin Endocrinol Metab 89, 4153-4157.

Cho, H., Harrison, K., Schwartz, O., Kehrl, J.H., 2003. The aorta and heart differentially express RGS (regulators of G-protein signalling) proteins that selectively regulate sphingosine 1-phosphate, angiotensin II and endothelin-1 signalling. Biochem J 371, 973-980.

Cho, H., Park, C., Hwang, I.Y., Han, S.B., Schimel, D., Despres, D., Kehrl, J.H., 2008. Rgs5 targeting leads to chronic low blood pressure and a lean body habitus. Mol Cell Biol 28, 2590-2597.

Demoliou-Mason, C.D., 1998. G-protein-coupled receptors in vascular smooth muscle cells. Biol Signals Recept 7, 90-97.

Grant, S.L., Lassegue, B., Griendling, K.K., Ushio-Fukai, M., Lyons, P.R., Alexander, R.W., 2000. Specific regulation of RGS2 messenger RNA by angiotensin II in cultured vascular smooth muscle cells. Mol Pharmacol 57, 460-467.

Grayson, T.H., Ohms, S.J., Brackenbury, T.D., Meaney, K.R., Peng, K., Pittelkow, Y.E., Wilson, S.R., Sandow, S.L., Hill, C.E., 2007. Vascular microarray profiling in two models of hypertension identifies caveolin-1, Rgs2 and Rgs5 as antihypertensive targets. BMC Genomics 8, 404.

Hendriks-Balk, M.C., Michel, M.C., Alewijnse, A.E., 2007. Pitfalls in the normalization of real-time polymerase chain reaction data. Basic Res Cardiol 102, 195-197.

Hendriks-Balk, M.C., Peters, S.L., Michel, M.C., Alewijnse, A.E., 2008a. Regulation of G protein-coupled receptor signalling: focus on the cardiovascular system and regulator of G protein signalling proteins. Eur J Pharmacol 585, 278-291.

Hendriks-Balk, M.C., van Loenen, P.B., Hajji, N., Michel, M.C., Peters, S.L., Alewijnse, A.E., 2008b. S1P receptor signalling and RGS proteins; expression and function in vascular smooth muscle cells and transfected CHO cells. Eur J Pharmacol 600, 1-9.

Heximer, S.P., Knutsen, R.H., Sun, X., Kaltenbronn, K.M., Rhee, M.H., Peng, N., Oliveira-dos-Santos, A., Penninger, J.M., Muslin, A.J., Steinberg, T.H., Wyss, J.M., Mecham, R.P., Blumer, K.J., 2003. Hypertension and prolonged vasoconstrictor signaling in RGS2-deficient mice. J Clin Invest 111, 445-452.

Hollinger, S., Hepler, J.R., 2002. Cellular regulation of RGS proteins: modulators and integrators of G protein signaling. Pharmacol Rev 54, 527-559.

Inoue, S., Nakazawa, T., Cho, A., Dastvan, F., Shilling, D., Daum, G., Reidy, M., 2007. Regulation of arterial lesions in mice depends on differential smooth muscle cell migration: a role for sphingosine-1-phosphate receptors. J Vasc Surg 46, 756-763.

Kohno, T., Igarashi, Y., 2008. Attenuation of cell motility observed with high doses of sphingosine 1-phosphate or phosphorylated FTY720 involves RGS2 through its interactions with the receptor S1P. Genes Cells 13, 747-757.

Li, Y., Hashim, S., Anand-Srivastava, M.B., 2005. Angiotensin II-evoked enhanced expression of RGS2 attenuates Gi-mediated adenylyl cyclase signaling in A10 cells. Cardiovasc Res 66, 503-511.

Michel, M.C., Mulders, A.C., Jongsma, M., Alewijnse, A.E., Peters, S.L., 2007. Vascular effects of sphingolipids. Acta Paediatr Suppl 96, 44-48.

Okamoto, H., Takuwa, N., Yokomizo, T., Sugimoto, N., Sakurada, S., Shigematsu, H., Takuwa, Y., 2000. Inhibitory regulation of Rac activation, membrane ruffling, and cell migration by the G protein-coupled sphingosine-1-phosphate receptor EDG5 but not EDG1 or EDG3. Mol Cell Biol 20, 9247-9261.

Peters, S.L., Alewijnse, A.E., 2007. Sphingosine-1-phosphate signaling in the cardiovascular system. Curr Opin Pharmacol 7, 186-192.

Riddle, E.L., Schwartzman, R.A., Bond, M., Insel, P.A., 2005. Multi-tasking RGS proteins in the heart: the next therapeutic target? Circ Res 96, 401-411.

Ross, E.M., Wilkie, T.M., 2000. GTPase-activating proteins for heterotrimeric G proteins: regulators of G protein signaling (RGS) and RGS-like proteins. Annu Rev Biochem 69, 795-827.

Semplicini, A., Lenzini, L., Sartori, M., Papparella, I., Calo, L.A., Pagnin, E., Strapazzon, G., Benna, C., Costa, R., Avogaro, A., Ceolotto, G., Pessina, A.C., 2006. Reduced expression of regulator of G-protein signaling 2 (RGS2) in hypertensive patients increases calcium mobilization and ERK1/2 phosphorylation induced by angiotensin II. J Hypertens 24, 1115-1124.

Sensken, S.C., Staubert, C., Keul, P., Levkau, B., Schoneberg, T., Graler, M.H., 2008. Selective activation of G alpha i mediated signalling of S1P(3) by FTY720-phosphate. Cell Signal 20, 1125-1133.

Siderovski, D.P., Willard, F.S., 2005. The GAPs, GEFs, and GDIs of heterotrimeric G-protein alpha subunits. Int J Biol Sci 1, 51-66.

Stuebe, S., Wieland, T., Kraemer, E., Stritzky, A., Schroeder, D., Seekamp, S., Vogt, A., Chen, C.K., Patten, M., 2008. Sphingosine-1-phosphate and endothelin-1 induce the expression of rgs16 protein in cardiac myocytes by transcriptional activation of the rgs16 gene. Naunyn Schmiedebergs Arch Pharmacol 376, 363-373.

Sun, X., Kaltenbronn, K.M., Steinberg, T.H., Blumer, K.J., 2005. RGS2 is a mediator of nitric oxide action on blood pressure and vasoconstrictor signaling. Mol Pharmacol 67, 631-639.

Tamama, K., Okajima, F., 2002. Sphingosine 1-phosphate signaling in atherosclerosis and vascular biology. Curr Opin Lipidol 13, 489-495.

Tang, K.M., Wang, G.R., Lu, P., Karas, R.H., Aronovitz, M., Heximer, S.P., Kaltenbronn, K.M., Blumer, K.J., Siderovski, D.P., Zhu, Y., Mendelsohn, M.E., 2003. Regulator of G-protein signaling-2 mediates vascular smooth muscle relaxation and blood pressure. Nat Med 9, 1506-1512.

Touyz, R.M., 2005. Intracellular mechanisms involved in vascular remodelling of resistance arteries in hypertension: role of angiotensin II. Exp Physiol 90, 449-455.

Vandesompele, J., De Preter, K., Pattyn, F., Poppe, B., Van Roy, N., De Paepe, A., Speleman, F., 2002. Accurate normalization of real-time quantitative RT-PCR data by geometric averaging of multiple internal control genes. Genome Biol 3, RESEARCH0034.

Wamhoff, B.R., Lynch, K.R., Macdonald, T.L., Owens, G.K., 2008. Sphingosine-1-phosphate receptor subtypes differentially regulate smooth muscle cell phenotype. Arterioscler Thromb Vasc Biol 28, 1454-1461.

Wang, X., Adams, L.D., Pabon, L.M., Mahoney, W.M., Jr., Beaudry, D., Gunaje, J., Geary, R.L., Deblois, D., Schwartz, S.M., 2008. RGS5, RGS4, and RGS2 expression and aortic contractibility are dynamically co-regulated during aortic banding-induced hypertrophy. J Mol Cell Cardiol 44, 539-550.

Wieland, T., Mittmann, C., 2003. Regulators of G-protein signalling: multifunctional proteins with impact on signalling in the cardiovascular system. Pharmacol Ther 97, 95-115.

Xie, G.X., Palmer, P.P., 2007. How regulators of G protein signaling achieve selective regulation. J Mol Biol 366, 349-365.

Xie, Z., Li, Z., Guo, L., Ye, C., Li, J., Yu, X., Yang, H., Wang, Y., Chen, C., Zhang, D., Liu-Chen, L.Y., 2007. Regulator of G protein signaling proteins differentially modulate signaling of mu and delta opioid receptors. Eur J Pharmacol 565, 45-53.

Yang, J., Kamide, K., Kokubo, Y., Takiuchi, S., Tanaka, C., Banno, M., Miwa, Y., Yoshii, M., Horio, T., Okayama, A., Tomoike, H., Kawano, Y., Miyata, T., 2005. Genetic variations of regulator of G-protein signaling 2 in hypertensive patients and in the general population. J Hypertens 23, 1497-1505.

Zhang, W., Anger, T., Su, J., Hao, J., Xu, X., Zhu, M., Gach, A., Cui, L., Liao, R., Mende, U., 2006. Selective loss of fine tuning of Gq/11 signaling by RGS2 protein exacerbates cardiomyocyte hypertrophy. J Biol Chem 281, 5811-5820.

Zou, M.X., Roy, A.A., Zhao, Q., Kirshenbaum, L.A., Karmazyn, M., Chidiac, P., 2006. RGS2 is upregulated by and attenuates the hypertrophic effect of alpha1-adrenergic activation in cultured ventricular myocytes. Cell Signal 18, 1655-1663.