Downloaded from UvA-DARE, the institutional repository of the University of Amsterdam (UvA)
http://dare.uva.nl/document/120760

File ID	120760
Filename	Appendix F: Family trees of Turkish and Kurdish political parties, 1920s-2005

SOURCE (OR PART OF THE FOLLOWING SOURCE):

Type	Dissertation
Title	Transnational migrant politics in the Netherlands : historical structures and current events
Author	L.M. Nell
Faculty	Faculty of Social and Behavioural Sciences
Year	2008
Pages	XVII, 316

FULL BIBLIOGRAPHIC DETAILS:
http://dare.uva.nl/record/290014

Copyright

It is not permitted to download or to forward/distribute the text or part of it without the consent of the author(s) and/or copyright holder(s), other then for strictly personal, individual use.

UvA-DARE is a service provided by the library of the University of Amsterdam (http://dare.uva.nl)

APPENDIX F: FAMILY TREES OF TURKISH AND KURDISH POLITICAL PARTIES, 1920S-2005

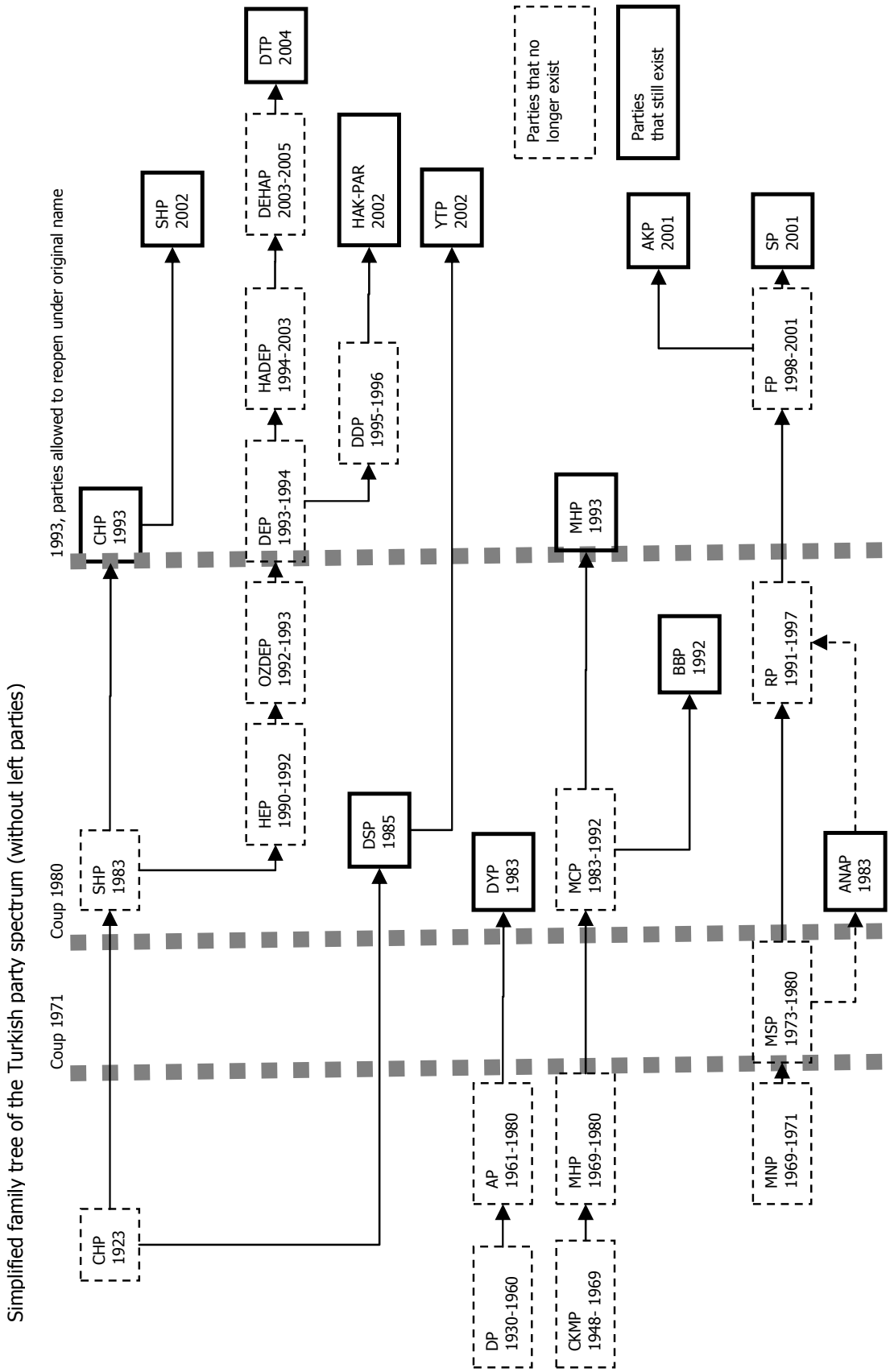
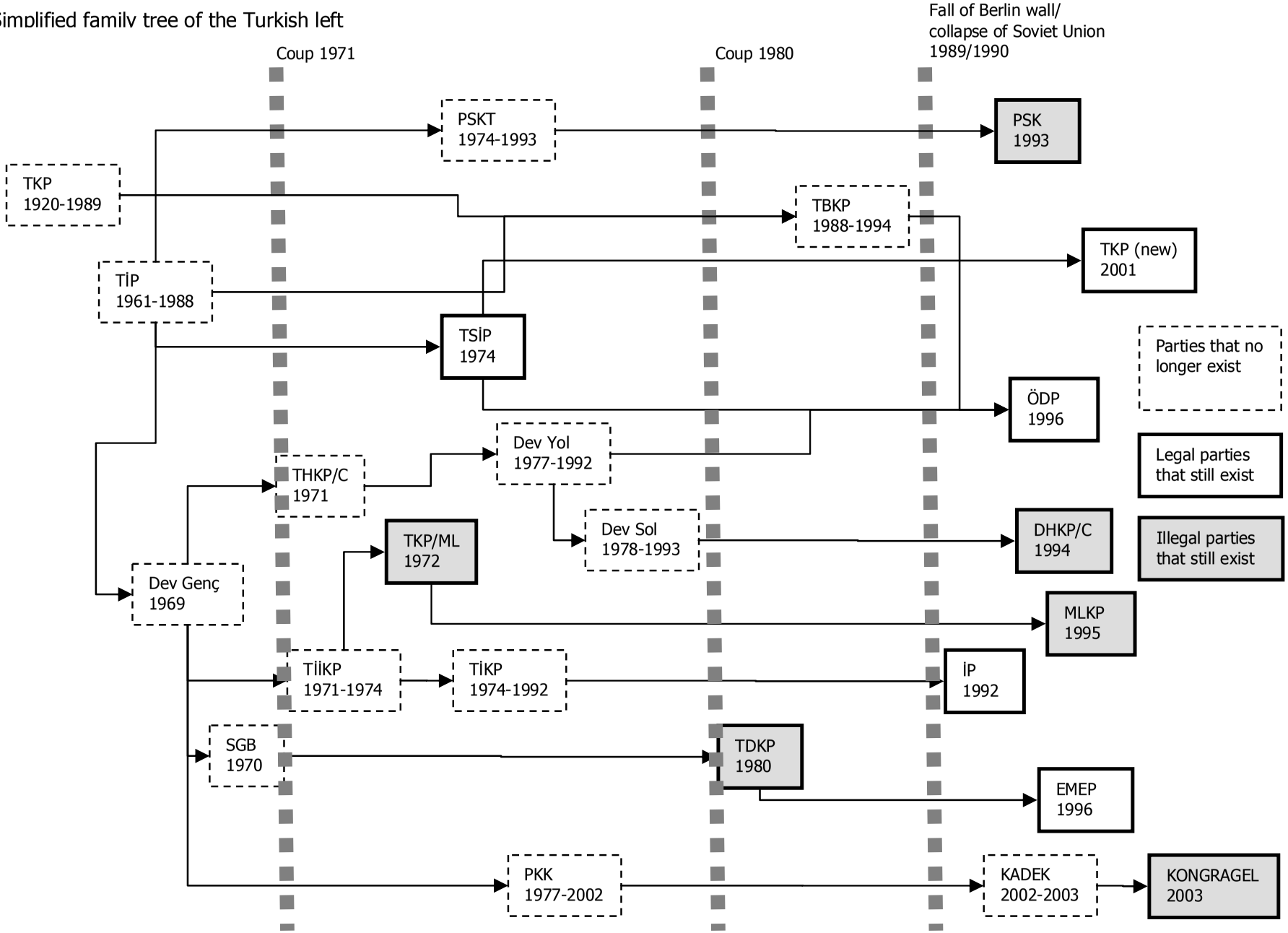
Simplified family tree of the Turkish left